ULTION
Product Guide
2024



BRISANTSECURE

BRISANTSECURE

ULTION LOCKS 6-43

- 3 Star PLUS 8-13
- 1 Star PLUS 14-15
- 3 Star (U keys) 16-21
- 3 Star (V/C keys) 22-25
- 1 Star (V/C keys) 26-27
- Padlocks 28
- Master Key & Suited Locks 29
- Ultion Nuki 30-33
- Ultion Bolt 34-39
- KeyTag 40-41
- KeyCap 42-43
- KeyLight 42-43

ULTION SWEET 44-68

- Door Handles 48-51
- 2 Star Handle 52-54
- 2 Star PLUS Handle 55-57
- Patio Handle 58
- Blanking Plate 58
- DDA Handle 59
- Escutcheon 60-61
- Numerals 62
- Knockers 63
- Letter Plate 64
- LetterGuard 65
- Inline Window Handle 66
- Cranked Window Handle 67
- Tilt and Turn Window Handle 68

BRISANT D 69-73

- Key/Key cylinders 69
- Thumb turn 70
- Modular / Half 71
- Oval, Scandanavian 72
- Rim cylinders / Padlocks 73

MARKETING SUPPORT 74-79

- Website/literature/POS 74-78
- Mobile Exhibition Vehicle 79

Serious about security? Us too.

Our range of performance products are built not only to protect, but to look great too.

We pride ourselves on our innovative approach to security. The extreme security and stunning, long-lasting hardware provided by Ultion and Ultion Sweet have not only satisfied homeowners but have also become a key selling point in the market, winning awards along the way. Our success lies in supplying products that homeowners desire - ultimate security combined with elegance.

This guide lists our major products, their relevant codes along with descriptions and specifications. Its not a comprehensive list, so if you need something that you cant find please get in touch. Equally, if you need any technical or marketing help, we are only a phone call or email away.

Brisant delivers next day with weekend orders delivered on Mondays

All telephone and on-line orders placed up until 1pm on a Sunday will be with locksmiths and installers ready for the working week. This also includes bespoke orders for keyed alike requirements.

Sales and support: 9.00am-5.00pm Monday to Friday
9.30am-2.00pm Sunday







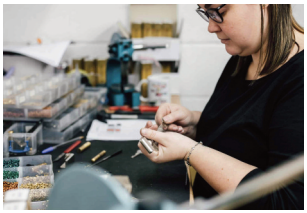



Why work with Brisant?

Brisant Secure is commited to providing the very best protection for British Homes.

Our range includes mechanical and smart locks, security handles and door furniture, window handles and accessories, all designed with performance in mind. We also provide the sales and marketing tools to help you secure more sales.

Partner with the experts in home security

Join the Brisant Secure trade network and gain access to our UK-based master suite specialists. You'll also have an experienced dedicated customer care team and account managers available via phone, email, or face-to-face.

All customers are welcome, whether you need 1 lock or 100,000.

Dual colour ULTION LOCKS



Non-handed ULTION LOCKS



ULTION | LOCKS

SUITED 2★ security handle



Next-day key delivery KEYED ALIKE all sizes



Designed for Composite Doors

MOLYBDENUM
25% DENSER THAN IRON
EXTREME DURABILITY

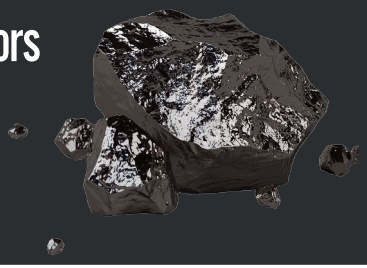

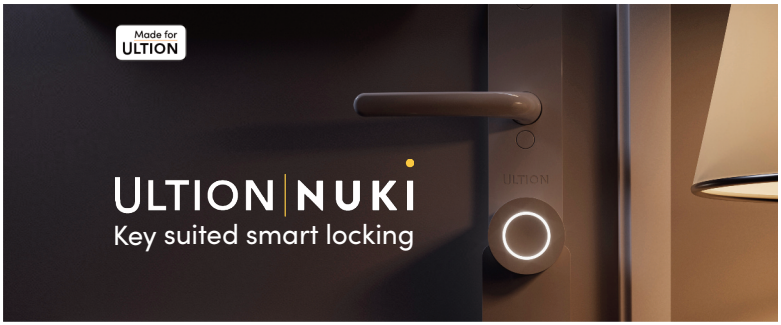

EVERY BODY APPROVES

Locksmiths	British Standards	Police
Sold Secure Diamond	TS007:2014 3 star	Preferred Specification

Secured by Design

Personalised MARKETING TOOLS for the installer

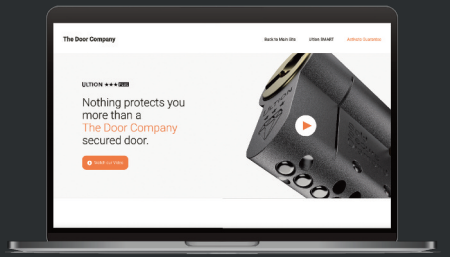

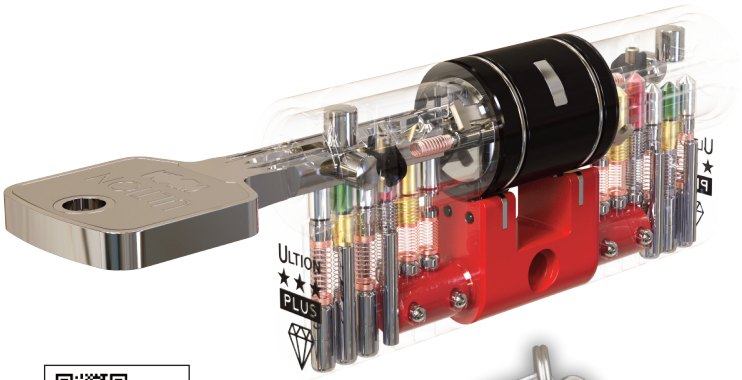

Point camera here for video

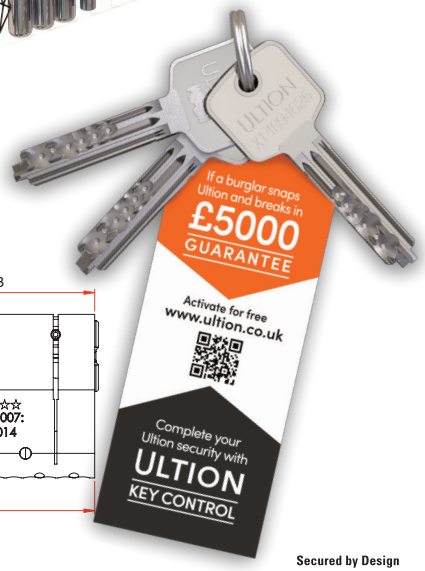

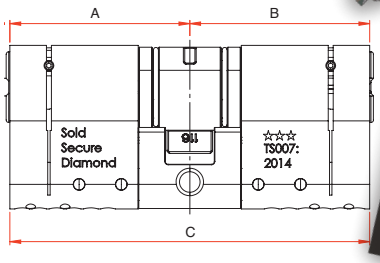

PACKAGING/MAINTENANCE

1 cylinder per box, 10 per outer box

Wipe the surface with a soft cloth to remove excess grease/moisture. Use Ultion Lock Lubricant every 6 months.

Complies with BS EN1303 classification

Category of use	Durability	Door mass	Fire resistance	Safety	Corrosion resistance/ temperature	Key related security	Attack resistance
1	6	0	0	0	C	5	D

Corrosion resistance

Meets the requirements of BS EN 1670:2007 Grade 3

Secured by Design

Police Preferred Specification

SOLD SECURE

KM657241
TS007:2014

Ultion 3 Star PLUS lock with LockDown Mode™

Inside the Ultion 3 Star PLUS door lock is an additional hidden lock, another layer of protection against intruders. Encased in a core made with molybdenum, LockDown Mode™ is triggered when Ultion detects a snapping attack.

Molybdenum is 25% denser than iron, extremely ductile and resistant to corrosion, but has one of the highest melting points of all pure elements.

With LockDown Mode™ active, Ultion blocks the intruder from entry whilst allowing the lock to be used normally from inside.

TECHNICAL INFORMATION

Cylinder:	Brass
Cam:	Molybdenum
Pins:	6 Steel & Brass Anti-tamper
Drill protection:	20 points
Lockdown mode:	2 x SS630 Attack Pins
Key	Nickel plated Brass 60% thicker than a standard key
Screw:	M5 x 40mm and M5 x 50mm nickel plate
Finish:	Dual Colour - Brass/Chrome available

KEY / KEY

Code	Description
DCBSW3030D	30 x 30
DCBSW3035D	30 x 35
DCBSW3040D	30 x 40
DCBSW3045D	30 x 45
DCBSW3050D	30 x 50
DCBSW3055D	30 x 55
DCBSW3060D	30 x 60
DCBSW3065D	30 x 65
DCBSW3070D	30 x 70
DCBSW3075D	30 x 75
DCBSW3535D	35 x 35
DCBSW3540D	35 x 40
DCBSW3545D	35 x 45
DCBSW3550D	35 x 50
DCBSW3555D	35 x 55
DCBSW3560D	35 x 60
DCBSW3565D	35 x 65
DCBSW3575D	35 x 75
DCBSW4040D	40 x 40
DCBSW4045D	40 x 45
DCBSW4050D	40 x 50
DCBSW4055D	40 x 55
DCBSW4060D	40 x 60
DCBSW4065D	40 x 65
DCBSW4070D	40 x 70
DCBSW4075D	40 x 75
DCBSW4545D	45 x 45
DCBSW4550D	45 x 50
DCBSW4555D	45 x 55
DCBSW4560D	45 x 60
DCBSW4565D	45 x 65
DCBSW4570D	45 x 70
DCBSW4575D	45 x 75
DCBSW5050D	50 x 50
DCBSW5055D	50 x 55
DCBSW5060D	50 x 60
DCBSW5065D	50 x 65
DCBSW5555D	55 x 55
DCBSW5560D	55 x 60
DCBSW5565D	55 x 65
DCBSW6060D	60 x 60
DCBSW6565D	65 x 65
DCBSW6575D	65 x 75

THUMB TURN (TT)	
Code	Description
DCBSW3030DT	30 TT x 30
DCBSW3035DT	30 TT x 35
DCBSW3040DT	30 TT x 40
DCBSW3045DT	30 TT x 45
DCBSW3050DT	30 TT x 50
DCBSW3055DT	30 TT x 55
DCBSW3060DT	30 TT x 60
DCBSW3065DT	30 TT x 65
DCBSW3075DT	30 TT x 75
DCBSW3530DT	35 TT x 30
DCBSW3535DT	35 TT x 35
DCBSW3540DT	35 TT x 40
DCBSW3545DT	35 TT x 45
DCBSW3550DT	35 TT x 50
DCBSW3555DT	35 TT x 55
DCBSW3560DT	35 TT x 60
DCBSW3565DT	35 TT x 65
DCBSW3575DT	35 TT x 75
DCBSW4030DT	40 TT x 30
DCBSW4035DT	40 TT x 35
DCBSW4040DT	40 TT x 40
DCBSW4045DT	40 TT x 45
DCBSW4050DT	40 TT x 50
DCBSW4055DT	40 TT x 55
DCBSW4060DT	40 TT x 60
DCBSW4065DT	40 TT x 65
DCBSW4530DT	45 TT x 30
DCBSW4535DT	45 TT x 35
DCBSW4540DT	45 TT x 40
DCBSW4545DT	45 TT x 45
DCBSW4550DT	45 TT x 50
DCBSW4555DT	45 TT x 55
DCBSW4560DT	45 TT x 60
DCBSW4565DT	45 TT x 65
DCBSW4575DT	45 TT x 75



THUMB TURN (TT)	
Code	Description
DCBSW5030DT	50 TT x 30
DCBSW5035DT	50 TT x 35
DCBSW5040DT	50 TT x 40
DCBSW5045DT	50 TT x 45
DCBSW5050DT	50 TT x 50
DCBSW5055DT	50 TT x 55
DCBSW5060DT	50 TT x 60
DCBSW5065DT	50 TT x 65
DCBSW5530DT	55 TT x 30
DCBSW5535DT	55 TT x 35
DCBSW5540DT	55 TT x 40
DCBSW5545DT	55 TT x 45
DCBSW5550DT	55 TT x 50
DCBSW5555DT	55 TT x 55
DCBSW5565DT	55 TT x 65
DCBSW6030DT	60 TT x 30
DCBSW6035DT	60 TT x 35
DCBSW6040DT	60 TT x 40
DCBSW6045DT	60 TT x 45
DCBSW6050DT	60 TT x 50
DCBSW6060DT	60 TT x 60
DCBSW6530DT	65 TT x 30
DCBSW6535DT	65 TT x 35
DCBSW6540DT	65 TT x 40
DCBSW6545DT	65 TT x 45
DCBSW6565DT	65 TT x 65
DCBSW7535DT	75 TT x 35
DCBSW7545DT	75 TT x 45

THUMB TURN (TT) HALF	
Code	Description
DCBS1030DT	10 X 30 TT
DCBS1035DT	10 X 35 TT
DCBS1040DT	10 X 40 TT
DCBS1045DT	10 X 45 TT
DCBS1050DT	10 X 50 TT
DCBS1055DT	10 X 55 TT
DCBS1060DT	10 X 60 TT
DCBS1065DT	10 X 65 TT

KEYED PAIRS THUMB TURN (TT)	
Code	Description
DCBSW3045DTKPK	30 TT x 45
DCBSW3535DTKPK	35 TT x 35
DCBSW4040DTKPK	40 TT x 40
DCBSW4050DTKPK	40 TT x 50
DCBSW4550DTKPK	45 TT x 50
DCBSW4555DTKPK	45 TT x 55
DCBSW5040DTKPK	50 TT x 40
DCBSW5045DTKPK	50 TT x 45
DCBSW5050DTKPK	50 TT x 50
DCBSW5545DTKPK	55 TT x 45



RIM CYLINDER	
Code	Description
DCBSWRMB	Brass
DCBSWRMC	Nickel
DCBSWSCC	Screw in Cylinder Nickel(pair)

HALF CYLINDER	
Code	Description
DCBSW1030D	10 x 30
DCBSW1030PB	10 x 30 Polished Brass
DCBSW1035D	10 x 35
DCBSW1040D	10 x 40
DCBSW1045D	10 x 45
DCBSW1050D	10 x 50
DCBSW1055D	10 x 55
DCBSW1060D	10 x 60
DCBSW1065D	10 x 65
DCBSW1070D	10 x 70
DCBSW1075D	10 x 75

KEYED PAIRS	
Code	Description
DCBSW3030DKPK	30 x 30
DCBSW3045DKPK	30 x 45
DCBSW3060DKPK	30 x 60
DCBSW3535DKPK	35 x 35
DCBSW3535PCKPK	35 x 35 6 Keys
DCBSW3545DKPK	35 x 45
DCBSW3550DKPK	35 x 50
DCBSW3555DKPK	35 x 55
DCBSW3560DKPK	35 x 60
DCBSW3565DKPK	35 x 65
DCBSW4040DKPK	40 x 40
DCBSW4045DKPK	40 x 45
DCBSW4050DKPK	40 x 50
DCBSW4065DKPK	40 x 65
DCBSW4545DKPK	45 x 45
DCBSW4550DKPK	45 x 50
DCBSW4555DKPK	45 x 55
DCBSW5050DKPK	50 x 50
DCBSW5565DKPK	55 x 65

KEYED PAIRS STABLE DOOR	
Code	Description
DCBSW3535DSD	35 x 35 KK/KT
DCBSW3535PBSD	35 x 35 KK/KT Polished Brass
DCBSW3535PCSD	35 x 35 KK/KT Polished Chrome

KEYED PAIRS HALF CYLINDER	
Code	Description
DCBSW1040DKPK	10 x 40
DCBSW10455050DKPK	10 x 45 50 x 50
DCBSW1045DKPK	10 x 45
DCBSW10505050DKPK	10 x 50 50 x 50
DCBSW1050DKPK	10 x 50
DCBSW1055DKPK	10 x 55

POLISHED CHROME

KEY / KEY CHROME	
Code	Description
DCBSW3030PC	30 x 30
DCBSW3035PC	30 x 35
DCBSW3040PC	30 x 40
DCBSW3045PC	30 x 45
DCBSW3050PC	30 x 50
DCBSW3055PC	30 x 55
DCBSW3535PC	35 x 35
DCBSW3540PC	35 x 40
DCBSW3545PC	35 x 45
DCBSW3550PC	35 x 50
DCBSW3555PC	35 x 55
DCBSW3560PC	35 x 60
DCBSW4040PC	40 x 40
DCBSW4045PC	40 x 45
DCBSW4050PC	40 x 50
DCBSW4055PC	40 x 55
DCBSW4060PC	40 x 60
DCBSW4545PC	45 x 45
DCBSW4550PC	45 x 50
DCBSW4555PC	45 x 55
DCBSW5050PC	50 x 50
DCBSW5055PC	50 x 55
DCBSW5555PC	55 x 55

HALF CYLINDER CHROME	
Code	Description
DCBSW1030PC	10 x 30
DCBSW1035PC	10 x 35
DCBSW1040PC	10 x 40
DCBSW1045PC	10 x 45
DCBSW1050PC	10 x 50
DCBSW1055PC	10 x 55

THUMB TURN (TT) CHROME	
Code	Description
DCBSW3030PCT	30 TT x 30
DCBSW3035PCT	30 TT x 35
DCBSW3040PCT	30 TT x 40
DCBSW3050PCT	30 TT x 50
DCBSW3530PCT	35 TT x 30
DCBSW3535PBT	35 TT x 35
DCBSW3535PCT	35 TT x 35
DCBSW3540PCT	35 TT x 40
DCBSW3545PCT	35 TT x 45
DCBSW3550PCT	35 TT x 50
DCBSW4030PCT	40 TT x 30
DCBSW4035PCT	40 TT x 35
DCBSW4040PCT	40 TT x 40
DCBSW4045PCT	40 TT x 45
DCBSW4050PCT	40 TT x 50
DCBSW4055PCT	40 TT x 55
DCBSW4060PCT	40 TT x 60
DCBSW4535PCT	45 TT x 35
DCBSW4540PCT	45 TT x 40
DCBSW4545PCT	45 TT x 45
DCBSW4550PCT	45 TT x 50
DCBSW4555PCT	45 TT x 55
DCBSW5035PCT	50 TT x 35
DCBSW5040PCT	50 TT x 40
DCBSW5045PCT	50 TT x 45
DCBSW5050PCT	50 TT x 50
DCBSW5535PCT	55 TT x 35
DCBSW5540PCT	55 TT x 40
DCBSW5545PCT	55 TT x 45

THUMB TURN (TT) CHROME HALF	
Code	Description
DCBSW1035PCT	10 x 35 TT
DCBSW1050PCT	10 x 50 TT

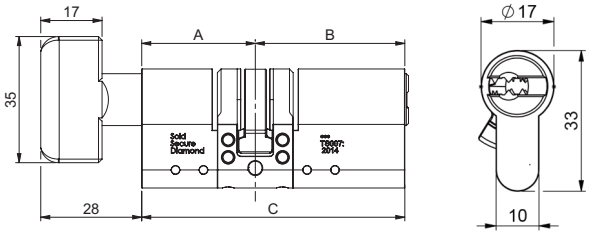

POLISHED BRASS

KEY / KEY BRASS	
Code	Description
DCBSW3030PB	30 x 30
DCBSW3035PB	30 x 35
DCBSW3040PB	30 x 40
DCBSW3045PB	30 x 45
DCBSW3050PB	30 x 50
DCBSW3055PB	30 x 55
DCBSW3535PB	35 x 35
DCBSW3540PB	35 x 40
DCBSW3545PB	35 x 45
DCBSW3550PB	35 x 50
DCBSW3555PB	35 x 55
DCBSW4040PB	40 x 40
DCBSW4045PB	40 x 45
DCBSW4050PB	40 x 50
DCBSW4055PB	40 x 55
DCBSW4060PB	40 x 60
DCBSW4545PB	45 x 45
DCBSW4550PB	45 x 50
DCBSW4555PB	45 x 55
DCBSW5050PB	50 x 50
DCBSW5055PB	50 x 55

HALF CYLINDER BRASS	
Code	Description
DCBSW1035PB	10 x 35
DCBSW1040PB	10 x 40
DCBSW1050PB	10 x 50

THUMB TURN (TT) BRASS HALF	
Code	Description
DCBSW1035PBT	10 x 35 TT
DCBSW1050PBT	10 x 50 TT

THUMB TURN (TT) BRASS	
Code	Description
DCBSW3030PBT	30 TT x 30
DCBSW3040PBT	30 TT x 40
DCBSW3045PBT	30 TT x 45
DCBSW3050PBT	30 TT x 50
DCBSW3530PBT	35 TT x 30
DCBSW3540PBT	35 TT x 40
DCBSW3545PBT	35 TT x 45
DCBSW3550PBT	35 TT x 50
DCBSW3555PBT	35 TT x 55
DCBSW4035PBT	40 TT x 35
DCBSW4040PBT	40 TT x 40
DCBSW4045PBT	40 TT x 45
DCBSW4050PBT	40 TT x 50
DCBSW4055PBT	40 TT x 55
DCBSW4530PBT	45 TT x 30
DCBSW4535PBT	45 TT x 35
DCBSW4540PBT	45 TT x 40
DCBSW4545PBT	45 TT x 45
DCBSW4550PBT	45 TT x 50
DCBSW4555PBT	45 TT x 55
DCBSW4575PBT	45 TT x 75
DCBSW5030PBT	50 TT x 30
DCBSW5035PBT	50 TT x 35
DCBSW5040PBT	50 TT x 40
DCBSW5045PBT	50 TT x 45
DCBSW5050PBT	50 TT x 50
DCBSW5535PBT	55 TT x 35
DCBSW5540PBT	55 TT x 40
DCBSW5545PBT	55 TT x 45



01924 410200
sales@brisant-secure.com www.brisant-secure.com

BRISANTSECURE

Brisant Secure reserves the right to change specification without notice (E&OE)



The Ultion 1 Star Plus lock is secure against picking, bumping, and drilling. The highly durable, thicker dimple key, operates smoothly and is resistant to snapping and bending. When paired with an Ultion 2 Star handle, it offers a £5,000 security guarantee against break-ins.

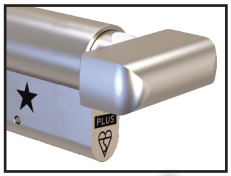

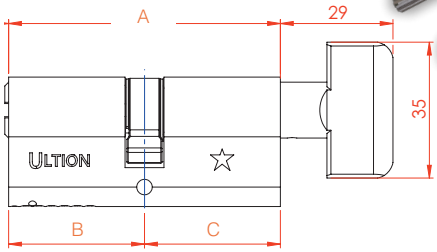



PACKAGING/MAINTENANCE

1 cylinder per box, 10 per outer box

Wipe the surface with a soft cloth to remove excess grease/moisture. Use Ultion Lock Lubricant every 6 months.

Complies with BS EN1303 classification

Category of use	Durability	Door mass	Fire resistance	Safety	Corrosion resistance/ temperature	Key related security	Attack resistance
1	6	0	0	0	C	5	D

Corrosion resistance

Meets the requirements of BS EN 1670:2007 Grade 3

Secured by Design

Police Preferred Specification

KM 657241-1
TS007-1:2014+A2:2018

KEY / KEY	
Code	Description
DCBSA3030D	30 x 30
DCBSA3035D	30 x 35
DCBSA3040D	30 x 40
DCBSA3045D	30 x 45
DCBSA3535D	35 x 35
DCBSA3540D	35 x 40
DCBSA3545D	35 x 45
DCBSA3550D	35 x 50
DCBSA3555D	35 x 55
DCBSA3565D	35 x 65
DCBSA4040D	40 x 40
DCBSA4045D	40 x 45
DCBSA4050D	40 x 50
DCBSA4055D	40 x 55
DCBSA4060D	40 x 60
DCBSA4065D	40 x 65
DCBSA4545D	45 x 45
DCBSA4550D	45 x 50
DCBSA4555D	45 x 55
DCBSA4560D	45 x 60
DCBSA5050D	50 x 50
DCBSA5060D	50 x 60
DCBSA5555D	55 x 55

KEYED PAIRS THUMB TURN (TT)	
Code	Description
DCBSA3535DTKPK	35TT x 35
DCBSA5050DTKPK	50TT x 50

KEYED PAIRS	
Code	Description
DCBSA3535DKPK	35 x 35
DCBSA3555DKPK	35 x 55
DCBSA4040DKPK	40 x 40
DCBSA4045DKPK	40 x 45
DCBSA4065DKPK	40 x 65
DCBSA4545DKPK	45 x 45
DCBSA4550DKPK	45 x 50
DCBSA5050DKPK	50 x 50

THUMB TURN (TT)	
Code	Description
DCBSA3030DT	30 TT x 30
DCBSA3040DT	30 TT x 40
DCBSA3045DT	30 TT x 45
DCBSA3530DT	35 TT x 30
DCBSA3535DT	35 TT x 35
DCBSA3540DT	35 TT x 40
DCBSA3545DT	35 TT x 45
DCBSA3550DT	35 TT x 50
DCBSA3555DT	35 TT x 55
DCBSA3565DT	35 TT x 65
DCBSA4040DT	40 TT x 40
DCBSA4045DT	40 TT x 45
DCBSA4050DT	40 TT x 50
DCBSA4055DT	40 TT x 55
DCBSA4060DT	40 TT x 60
DCBSA4065DT	40 TT x 65
DCBSA4530DT	45 TT x 30
DCBSA4535DT	45 TT x 35
DCBSA4540DT	45 TT x 40
DCBSA4545DT	45 TT x 45
DCBSA4550DT	45 TT x 50
DCBSA4555DT	45 TT x 55
DCBSA5040DT	50 TT x 40
DCBSA5045DT	50 TT x 45
DCBSA5050DT	50 TT x 50
DCBSA5060DT	50 TT x 60
DCBSA5535DT	55 TT x 35
DCBSA5540DT	55 TT x 40
DCBSA5545DT	55 TT x 45

HALF CYLINDER	
Code	Description
DCBSA1030D	10 x 30
DCBSA1035D	10 x 35
DCBSA1040D	10 x 40
DCBSA1045D	10 x 45
DCBSA1050D	10 x 50
DCBSA1055D	10 x 55

Lock Down Mode

A hidden attack lock secures the mechanism.

Double
Anti-Snap protection
The intruder needs to snap Ultion twice before he see's the core.

2
Attack locks
Lock still works from inside after an attack.

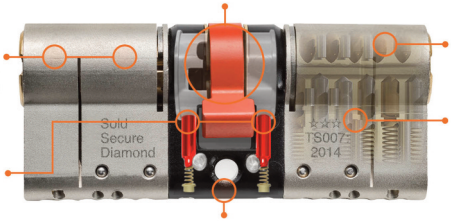

11
Pins
Twice as many as normal locks.

8
Drill Defences
6 hardened steel rods and 2 plates in both ends.

25%
Denser than iron
The molybdenum core that houses the attack pins..



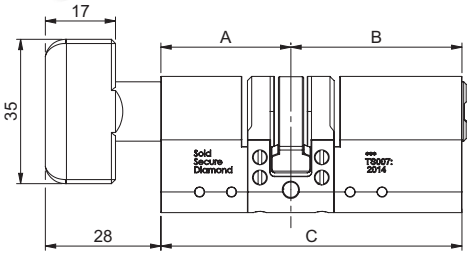

PACKAGING/MAINTENANCE

1 cylinder per box, 10 per outer box



Wipe the surface with a soft cloth to remove excess grease/moisture. Use Ultion Lock Lubricant every 6 months.

Complies with BS EN1303 classification

Category of use	Durability	Door mass	Fire resistance	Safety	Corrosion resistance/ temperature	Key related security	Attack resistance
1	6	0	0	0	C	5	D

Corrosion resistance
Meets the requirements of BS EN 1670:2007 Grade 3

Secured by Design
Police Preferred Specification

SOLD SECURE
Lock Cylinders Diamond

KM657241
TS007:2014

The original Ultion 3 Star lock with LockDown Mode™

KEY / KEY	
Code	Description
DCBSU3030D	30 x 30
DCBSU3035D	30 x 35
DCBSU3040D	30 x 40
DCBSU3045D	30 x 45
DCBSU3050D	30 x 50
DCBSU3055D	30 x 55
DCBSU3060D	30 x 60
DCBSU3065D	30 x 65
DCBSU3075D	30 x 75

TECHNICAL INFORMATION

Cylinder:	Brass
Cam:	Molybdenum
Pins:	6 Steel & Brass Anti-tamper
Drill protection:	20 points
Lockdown mode:	2 x SS630 Attack Pins
Key	Nickel plated Brass 60% thicker than a standard key
Screw:	M5 x 40mm and M5 x 50mm nickel plate
Finish:	Dual Colour - Brass/Chrome available

KEY / KEY	
Code	Description
DCBSU3535D	35 x 35
DCBSU3540D	35 x 40
DCBSU3545D	35 x 45
DCBSU3550D	35 x 50
DCBSU3555D	35 x 55
DCBSU3560D	35 x 60
DCBSU3565D	35 x 65
DCBSU3575D	35 x 75
DCBSU4040D	40 x 40
DCBSU4045D	40 x 45
DCBSU4050D	40 x 50
DCBSU4055D	40 x 55
DCBSU4060D	40 x 60
DCBSU4065D	40 x 65
DCBSU4070D	40 x 70
DCBSU4075D	40 x 75
DCBSU4545D	45 x 45
DCBSU4550D	45 x 50
DCBSU4555D	45 x 55
DCBSU4560D	45 x 60
DCBSU4565D	45 x 65
DCBSU4575D	45 x 75
DCBSU5050D	50 x 50
DCBSU5055D	50 x 55
DCBSU5060D	50 x 60
DCBSU5065D	50 x 65
DCBSU5555D	55 x 55
DCBSU5560D	55 x 60
DCBSU5565D	55 x 65
DCBSU6060D	60 x 60
DCBSU6565D	65 x 65
DCBSU6575D	65 x 75

THUMB TURN (TT)	
Code	Description
DCBSU3030DT	30 TT x 30
DCBSU3035DT	30 TT x 35
DCBSU3040DT	30 TT x 40
DCBSU3045DT	30 TT x 45
DCBSU3050DT	30 TT x 50
DCBSU3055DT	30 TT x 55
DCBSU3060DT	30 TT x 60
DCBSU3065DT	30 TT x 65
DCBSU3075DT	30 TT x 75
DCBSU3530DT	35 TT x 30
DCBSU3535DT	35 TT x 35
DCBSU3540DT	35 TT x 40
DCBSU3545DT	35 TT x 45
DCBSU3550DT	35 TT x 50
DCBSU3555DT	35 TT x 55
DCBSU3560DT	35 TT x 60
DCBSU3565DT	35 TT x 65
DCBSU3575DT	35 TT x 75
DCBSU4030DT	40 TT x 30
DCBSU4035DT	40 TT x 35
DCBSU4040DT	40 TT x 40
DCBSU4045DT	40 TT x 45
DCBSU4050DT	40 TT x 50
DCBSU4055DT	40 TT x 55
DCBSU4060DT	40 TT x 60
DCBSU4065DT	40 TT x 65
DCBSU4530DT	45 TT x 30
DCBSU4535DT	45 TT x 35
DCBSU4540DT	45 TT x 40
DCBSU4545DT	45 TT x 45
DCBSU4550DT	45 TT x 50
DCBSU4555DT	45 TT x 55
DCBSU4560DT	45 TT x 60
DCBSU4565DT	45 TT x 65
DCBSU4575DT	45 TT x 75

THUMB TURN (TT)	
Code	Description
DCBSU5030DT	50 TT x 30
DCBSU5035DT	50 TT x 35
DCBSU5040DT	50 TT x 40
DCBSU5045DT	50 TT x 45
DCBSU5050DT	50 TT x 50
DCBSU5055DT	50 TT x 55
DCBSU5060DT	50 TT x 60
DCBSU5065DT	50 TT x 65
DCBSU5530DT	55 TT x 30
DCBSU5535DT	55 TT x 35
DCBSU5540DT	55 TT x 40
DCBSU5545DT	55 TT x 45
DCBSU5550DT	55 TT x 50
DCBSU5555DT	55 TT x 55
DCBSU5565DT	55 TT x 65
DCBSU6030DT	60 TT x 30
DCBSU6035DT	60 TT x 35
DCBSU6040DT	60 TT x 40
DCBSU6045DT	60 TT x 45
DCBSU6050DT	60 TT x 50
DCBSU6060DT	60 TT x 60
DCBSU6530DT	65 TT x 30
DCBSU6535DT	65 TT x 35
DCBSU6540DT	65 TT x 40
DCBSU6545DT	65 TT x 45
DCBSU7535DT	75 TT x 35
DCBSU7545DT	75 TT x 45

KEYED PAIRS THUMB TURN (TT)	
Code	Description
DCBSU3535DTKPK	35 TT x 35
DCBSU4550DTKPK	45 TT x 50
DCBSU5050DTKPK	50 TT x 50
DCBSU5545DTKPK	55 TT x 45



THUMB TURN (TT) HALF	
Code	Description
DCBS1030DT	10 X 30 TT
DCBS1035DT	10 X 35 TT
DCBS1040DT	10 X 40 TT
DCBS1045DT	10 X 45 TT
DCBS1050DT	10 X 50 TT
DCBS1055DT	10 X 55 TT
DCBS1060DT	10 X 60 TT
DCBS1065DT	10 X 65 TT

HALF CYLINDER	
Code	Description
DCBSU1030D	10 x 30
DCBSU1035D	10 x 35
DCBSU1040D	10 x 40
DCBSU1045D	10 x 45
DCBSU1050D	10 x 50
DCBSU1055D	10 x 55
DCBSU1060D	10 x 60
DCBSU1065D	10 x 65
DCBSU1070D	10 x 70
DCBSU1075D	10 x 75

KEYED PAIRS	
Code	Description
DCBSU3060DKPK	30 x 60
DCBSU3535DKPK	35 x 35
DCBSU3555DKPK	35 x 55
DCBSU4040DKPK	40 x 40
DCBSU4050DKPK	40 x 50
DCBSU4545DKPK	45 x 45 6 Keys
DCBSU4550DKPK	45 x 50
DCBSU4555DKPK	45 x 55
DCBSU5050DKPK	50 x 50

KEYED PAIRS STABLE DOOR	
Code	Description
DCBSU3535DSD	35 x 35 Kit KK/KT

KEYED PAIRS HALF CYLINDER	
Code	Description
DCBSU10455050DKPK	10 x 45 50 x 50
DCBSU1045DKPK	10 x 45

RIM CYLINDER	
Code	Description
DCBSURMB	Brass
DCBSURMC	Nickel



POLISHED CHROME

KEY / KEY CHROME	
Code	Description
DCBSU3030PC	30 x 30
DCBSU3035PC	30 x 35
DCBSU3040PC	30 x 40
DCBSU3045PC	30 x 45
DCBSU3050PC	30 x 50
DCBSU3535PC	35 x 35
DCBSU3540PC	35 x 40
DCBSU3545PC	35 x 45
DCBSU3550PC	35 x 50
DCBSU3555PC	35 x 55
DCBSU4045PC	40 x 45
DCBSU4040PC	40 x 40
DCBSU4050PC	40 x 50
DCBSU4055PC	40 x 55
DCBSU4060PC	40 x 60
DCBSU4545PC	45 x 45
DCBSU4550PC	45 x 50
DCBSU4555PC	45 x 55
DCBSU5050PC	50 x 50

HALF CYLINDER CHROME	
Code	Description
DCBSU1030PC	10 x 30
DCBSU1035PC	10 x 35
DCBSU1040PC	10 x 40
DCBSU1045PC	10 x 45
DCBSU1050PC	10 x 50
DCBSU1055PC	10 x 55

THUMB TURN (TT) CHROME	
Code	Description
DCBSU3030PCT	30 TT x 30
DCBSU3035PCT	30 TT x 35
DCBSU3040PCT	30 TT x 40
DCBSU3050PCT	30 TT x 50
DCBSU3530PCT	35 TT x 30
DCBSU3535PCT	35 TT x 35
DCBSU3540PCT	35 TT x 40
DCBSU3545PCT	35 TT x 45
DCBSU3550PCT	35 TT x 50
DCBSU4030PCT	40 TT x 30
DCBSU4035PCT	40 TT x 35
DCBSU4040PCT	40 TT x 40
DCBSU4045PCT	40 TT x 45
DCBSU4050PCT	40 TT x 50
DCBSU4055PCT	40 TT x 55
DCBSU4535PCT	45 TT x 35
DCBSU4540PCT	45 TT x 40
DCBSU4545PCT	45 TT x 45
DCBSU4550PCT	45 TT x 50
DCBSU4555PCT	45 TT x 55
DCBSU5035PCT	50 TT x 35
DCBSU5040PCT	50 TT x 40
DCBSU5045PCT	50 TT x 45
DCBSU5050PCT	50 TT x 50
DCBSU5535PCT	55 TT x 35
DCBSU5540PCT	55 TT x 40
DCBSU5545PCT	55 TT x 45



THUMB TURN (TT) CHROME HALF	
Code	Description
DCBS1030PCT	10 x 30 TT
DCBS1035PCT	10 x 35 TT
DCBS1040PCT	10 x 40 TT
DCBS1045PCT	10 x 45 TT
DCBS1050PCT	10 x 50 TT
DCBS1055PCT	10 x 55 TT
DCBS1060PCT	10 x 60 TT
DCBS1065PCT	10 x 65 TT

POLISHED BRASS

KEY / KEY BRASS	
Code	Description
DCBSU3035PB	30 x 35
DCBSU3040PB	30 x 40
DCBSU3045PB	30 x 45
DCBSU3050PB	30 x 50
DCBSU3055PB	30 x 55
DCBSU3535PB	35 x 35
DCBSU3540PB	35 x 40
DCBSU3545PB	35 x 45
DCBSU3550PB	35 x 50
DCBSU3555PB	35 x 55
DCBSU4040PB	40 x 40
DCBSU4045PB	40 x 45
DCBSU4050PB	40 x 50
DCBSU4055PB	40 x 55
DCBSU4060PB	40 x 60
DCBSU4545PB	45 x 45
DCBSU4550PB	45 x 50
DCBSU4555PB	45 x 55
DCBSU5050PB	50 x 50
DCBSU5055PB	50 x 55

HALF CYLINDER BRASS	
Code	Description
DCBSU1035PB	10 x 35
DCBSU1040PB	10 x 40
DCBSU1050PB	10 x 50

THUMB TURN (TT) BRASS HALF	
Code	Description
DCBS1030PBT	10 x 30 TT
DCBS1035PBT	10 x 35 TT
DCBS1040PBT	10 x 40 TT
DCBS1045PBT	10 x 45 TT
DCBS1050PBT	10 x 50 TT
DCBS1055PBT	10 x 55 TT
DCBS1060PBT	10 x 60 TT
DCBS1065PBT	10 x 65 TT

THUMB TURN (TT) BRASS	
Code	Description
DCBSU3030PBT	30 TT x 30
DCBSU3040PBT	30 TT x 40
DCBSU3045PBT	30 TT x 45
DCBSU3050PBT	30 TT x 50
DCBSU3530PBT	35 TT x 30
DCBSU3535PBT	35 TT x 35
DCBSU3540PBT	35 TT x 40
DCBSU3545PBT	35 TT x 45
DCBSU3550PBT	35 TT x 50
DCBSU3555PBT	35 TT x 55
DCBSU4035PBT	40 TT x 35
DCBSU4040PBT	40 TT x 40
DCBSU4045PBT	40 TT x 45
DCBSU4050PBT	40 TT x 50
DCBSU4055PBT	40 TT x 55
DCBSU4530PBT	45 TT x 30
DCBSU4535PBT	45 TT x 35
DCBSU4540PBT	45 TT x 40
DCBSU4545PBT	45 TT x 45
DCBSU4550PBT	45 TT x 50
DCBSU4555PBT	45 TT x 55
DCBSU4575PBT	45 TT x 75
DCBSU5030PBT	50 TT x 30
DCBSU5035PBT	50 TT x 35
DCBSU5040PBT	50 TT x 40
DCBSU5045PBT	50 TT x 45
DCBSU5050PBT	50 TT x 50
DCBSU5535PBT	55 TT x 35
DCBSU5540PBT	55 TT x 40
DCBSU5545PBT	55 TT x 45

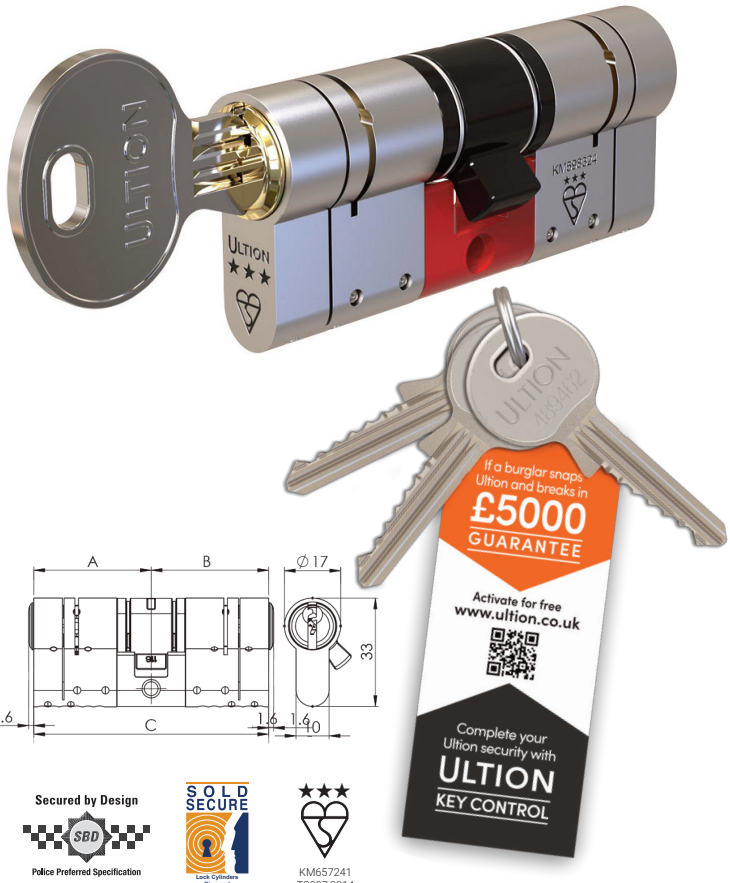

Secured by Design
Police Preferred Specification

SOLD SECURE
Lock Cylinders Diamond

KM657241
TS007:2014



Packaging/maintenance
1 cylinder per box, 10 per outer box

Wipe the surface with a soft cloth to remove excess grease/moisture. Use Ultion Lock Lubricant every 6 months.

Complies with BS EN1303 classification

Category of use	Durability	Door mass	Fire resistance	Safety	Corrosion resistance/ temperature	Key related security	Attack resistance
1	6	0	0	0	C	5	D

Corrosion resistance
Meets the requirements of BS EN 1670:2007 Grade 3

Ultion 3 Star lock with LockDown Mode™

Inside the Ultion 3 Star door lock is an additional hidden lock, another layer of protection against intruders. Encased in a core made with molybdenum, LockDown Mode™ is triggered when Ultion detects a snapping attack.

Molybdenum is 25% denser than iron, extremely ductile and resistant to corrosion, but has one of the highest melting points of all pure elements.

With LockDown Mode™ active, Ultion blocks the intruder from entry whilst allowing the lock to be used normally from inside.

TECHNICAL INFORMATION

Cylinder:	Brass
Cam:	Molybdenum
Pins:	6 Steel & Brass Anti-tamper
Key	Nickel plated Brass
Screw:	M5 x 40mm and M5 x 50mm nickel plate
Finish:	Dual Colour -

HALF CYLINDER

Code	Description
DCBSV1030D	10 x 30
DCBSV1035D	10 x 35
DCBSV1040D	10 x 40
DCBSV1045D	10 x 45
DCBSV1050D	10 x 50
DCBSV1055D	10 x 55
DCBSV1060D	10 x 60

KEY / KEY

Code	Description
DCBSV3030D	30 x 30
DCBSV3035D	30 x 35
DCBSV3040D	30 x 40
DCBSV3045D	30 x 45
DCBSV3050D	30 x 50
DCBSV3055D	30 x 55
DCBSV3060D	30 x 60
DCBSV3535D	35 x 35
DCBSV3540D	35 x 40
DCBSV3545D	35 x 45
DCBSV3550D	35 x 50
DCBSV3555D	35 x 55
DCBSV3560D	35 x 60
DCBSV4040D	40 x 40
DCBSV4045D	40 x 45
DCBSV4050D	40 x 50
DCBSV4055D	40 x 55
DCBSV4060D	40 x 60
DCBSV4545D	45 x 45
DCBSV4550D	45 x 50
DCBSV4555D	45 x 55
DCBSV4560D	45 x 60
DCBSV5050D	50 x 50
DCBSV5055D	50 x 55
DCBSV5060D	50 x 60
DCBSV5555D	55 x 55
DCBSV5560D	55 x 60
DCBSV6060D	60 x 60

KEYED PAIRS HALF CYLINDER

Code	Description
DCBSV1040DKPK	10 x 40
DCBSV10455050DKPK	10 x 45 50 x 50
DCBSV1050DKPK	10 x 50

RIM CYLINDER

Code	Description
DCBSCRMB	Brass
DCBSCRMC	Nickel

THUMB TURN (TT)	
Code	Description
DCBSV3030DT	30 TT x 30
DCBSV3035DT	30 TT x 35
DCBSV3040DT	30 TT x 40
DCBSV3045DT	30 TT x 45
DCBSV3050DT	30 TT x 50
DCBSV3055DT	30 TT x 55
DCBSV3060DT	30 TT x 60
DCBSV3530DT	35 TT x 30
DCBSV3535DT	35 TT x 35
DCBSV3540DT	35 TT x 40
DCBSV3545DT	35 TT x 45
DCBSV3550DT	35 TT x 50
DCBSV3555DT	35 TT x 55
DCBSV3560DT	35 TT x 60
DCBSV3565DT	35 TT x 65
DCBSV4030DT	40 TT x 30
DCBSV4035DT	40 TT x 35
DCBSV4040DT	40 TT x 40
DCBSV4045DT	40 TT x 45
DCBSV4050DT	40 TT x 50
DCBSV4055DT	40 TT x 55
DCBSV4060DT	40 TT x 60

THUMB TURN (TT)	
Code	Description
DCBSV4530DT	45 TT x 30
DCBSV4535DT	45 TT x 35
DCBSV4540DT	45 TT x 40
DCBSV4545DT	45 TT x 45
DCBSV4550DT	45 TT x 50
DCBSV4555DT	45 TT x 55
DCBSV4560DT	45 TT x 60
DCBSV5030DT	50 TT x 30
DCBSV5035DT	50 TT x 35
DCBSV5040DT	50 TT x 40
DCBSV5045DT	50 TT x 45
DCBSV5050DT	50 TT x 50
DCBSV5055DT	50 TT x 55
DCBSV5060DT	50 TT x 60
DCBSV5530DT	55 TT x 30
DCBSV5535DT	55 TT x 35
DCBSV5540DT	55 TT x 40
DCBSV5545DT	55 TT x 45
DCBSV5550DT	55 TT x 50
DCBSV5555DT	55 TT x 55
DCBSV5560DT	55 TT x 60
DCBSV6030DT	60 TT x 30
DCBSV6035DT	60 TT x 35
DCBSV6040DT	60 TT x 40
DCBSV6045DT	60 TT x 45
DCBSV6050DT	60 TT x 50
DCBSV6055DT	60 TT x 55

KEYED PAIRS THUMB TURN (TT)	
Code	Description
DCBSV3535DTKPK	35 TT x 35
DCBSV4040DTKPK	40 TT x 40
DCBSV4050DTKPK	40 TT x 50
DCBSV4545DTKPK	45 TT x 45
DCBSV4550DTKPK	45 TT x 50
DCBSV4555DTKPK	45 TT x 55
DCBSV5040DTKPK	50 TT x 40
DCBSV5045DTKPK	50 TT x 45
DCBSV5050DTKPK	50 TT x 50
DCBSV5535DTKPK	55 TT x 35
DCBSV5545DTKPK	55 TT x 45

KEYED PAIRS	
Code	Description
DCBSV3030DKPK	30 x 30
DCBSV3045DKPK	30 x 45
DCBSV3535DKPK	35 x 35
DCBSV3545DKPK	35 x 45
DCBSV3555DKPK	35 x 55
DCBSV3560DKPK	35 x 60
DCBSV3565DKPK	35 x 65
DCBSV4040DKPK	40 x 40
DCBSV4045DKPK	40 x 45
DCBSV4050DKPK	40 x 50
DCBSV4065DKPK	40 x 65
DCBSV4545DKPK	45 x 45
DCBSV4550DKPK	45 x 50
DCBSV4555DKPK	45 x 55
DCBSV5050DKPK	50 x 50



MATCHING ULTION 1 STAR AND 3 STAR LOCKS CAN BE OPERATED BY THE SAME KEY

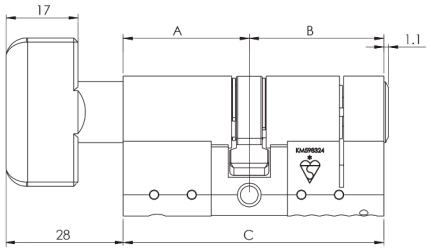

TECHNICAL INFORMATION

Cylinder:	Brass
Cam:	Molybdenum
Pins:	6 Steel & Brass Anti-tamper
Key	Nickel plated Brass
Screw:	M5 x 40mm and M5 x 50mm nickel plate
Finish:	Dual Colour -

KM598324
TS007:2014

Secured by Design
Police Preferred Specification

PACKAGING/MAINTENANCE

1 cylinder per box, 10 per outer box

Wipe the surface with a soft cloth to remove excess grease/moisture. Use Ultion Lock Lubricant every 6 months.

Complies with BS EN1303 classification

Category of use	Durability	Door mass	Fire resistance	Safety	Corrosion resistance/temperature	Key related security	Attack resistance
1	6	0	0	0	C	5	D

Corrosion resistance
Meets the requirements of BS EN 1670:2007 Grade 3

£5000 guarantee. 1 star and 1 star plus must be used with the Ultion 2 star handle.

KEY / KEY

Code	Description
DCBSC3030D	30 x 30
DCBSC3035D	30 x 35
DCBSC3040D	30 x 40
DCBSC3045D	30 x 45
DCBSC3050D	30 x 50
DCBSC3055D	30 x 55
DCBSC3060D	30 x 60
DCBSC3065D	30 x 65
DCBSC3535D	35 x 35
DCBSC3540D	35 x 40
DCBSC3545D	35 x 45
DCBSC3550D	35 x 50
DCBSC3555D	35 x 55
DCBSC3560D	35 x 60
DCBSC4040D	40 x 40
DCBSC4045D	40 x 45
DCBSC4050D	40 x 50
DCBSC4055D	40 x 55
DCBSC4060D	40 x 60
DCBSC4545D	45 x 45
DCBSC4550D	45 x 50
DCBSC4555D	45 x 55
DCBSC4560D	45 x 60
DCBSC5050D	50 x 50
DCBSC5055D	50 x 55
DCBSC5060D	50 x 60
DCBSC5555D	55 x 55

KEYED PAIRS

Code	Description
DCBSC10505050DKPK	10 x 50 50 x 50
DCBSC4040DKPK	40 x 40
DCBSC4550DKPK	45 x 50
DCBSC5050DKPK	50 x 50

RIM CYLINDER

Code	Description
DCBSCRMBF	Brass
DCBSCRMCF	Nickel

THUMB TURN (TT)

Code	Description
DCBSC3030DT	30 TT x 30
DCBSC3035DT	30 TT x 35
DCBSC3040DT	30 TT x 40
DCBSC3045DT	30 TT x 45
DCBSC3050DT	30 TT x 50
DCBSC3055DT	30 TT x 55
DCBSC3060DT	30 TT x 60
DCBSC3530DT	35 TT x 30
DCBSC3535DT	35 TT x 35
DCBSC3540DT	35 TT x 40
DCBSC3545DT	35 TT x 45
DCBSC3550DT	35 TT x 50
DCBSC3555DT	35 TT x 55
DCBSC3560DT	35 TT x 60
DCBSC4030DT	40 TT x 30
DCBSC4035DT	40 TT x 35
DCBSC4040DT	40 TT x 40
DCBSC4045DT	40 TT x 45
DCBSC4050DT	40 TT x 50
DCBSC4055DT	40 TT x 55
DCBSC4060DT	40 TT x 60
DCBSC4535DT	45 TT x 35
DCBSC4540DT	45 TT x 40
DCBSC4545DT	45 TT x 45
DCBSC4550DT	45 TT x 50
DCBSC4555DT	45 TT x 55
DCBSC5035DT	50 TT x 35
DCBSC5040DT	50 TT x 40
DCBSC5045DT	50 TT x 45
DCBSC5050DT	50 TT x 50
DCBSC5055DT	50 TT x 55
DCBSC5060DT	50 TT x 60
DCBSC5535DT	55 TT x 35
DCBSC5540DT	55 TT x 40
DCBSC5545DT	55 TT x 45
DCBSC5555DT	55 TT x 55
DCBSC6035DT	60 TT x 35
DCBSC6040DT	60 TT x 40

HALF CYLINDER

Code	Description
DCBSC1030D	10 x 30
DCBSC1035D	10 x 35
DCBSC1040D	10 x 40
DCBSC1045D	10 x 45
DCBSC1050D	10 x 50
DCBSC1055D	10 x 55

TECHNICAL INFORMATION

Body Material	C3604 High tensile Brass Tensile Strength 333 Mpa
Body Finish	US26D Satin chrome Plate
Body Material	SUS303 Stainless steel Tensile Strength 500 Mpa
Body Finish	US26D Satin chrome Plate
Finish	Anti corrosion Oil
Weight	0.6 Kg w/o cyl

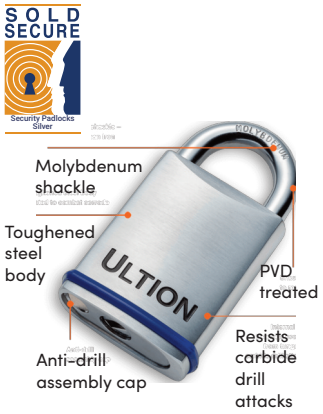

Dims.mm	Lock Body			Shackle		
54 PADLOCK	W	H	T	D	X	Y
1 inch	54	49	30	9.5	28	20
2 inch	54	49	30	9.5	50	20
3 inch	54	49	30	9.5	76	20
61 PADLOCK	W	H	T	D	X	Y
1 inch	61	76	32	11	28	20
2 inch	61	76	32	11	50	20
3 inch	61	76	32	11	76	20
70 PADLOCK	W	H	T	D	X	Y
1 inch	70	76	34	14	28	20
2 inch	70	76	34	14	50	20
3 inch	70	76	34	14	76	20

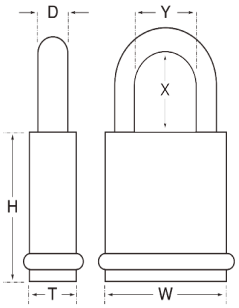

PADLOCKS ASSEMBLED

Code	Description
PDBSU541	54/1
PDBSU542	54/2
PDBSU611	61/1
PDBSU612	61/2
PDBSU613	61/3
PDBSU61C	61mm Closed
PDBSU61CSS	61mm Closed Sold Secure
PDBSU70C	70 Closed
PDBSU701	70/1
PDBSU702	70/2
PDBSU703	70/3



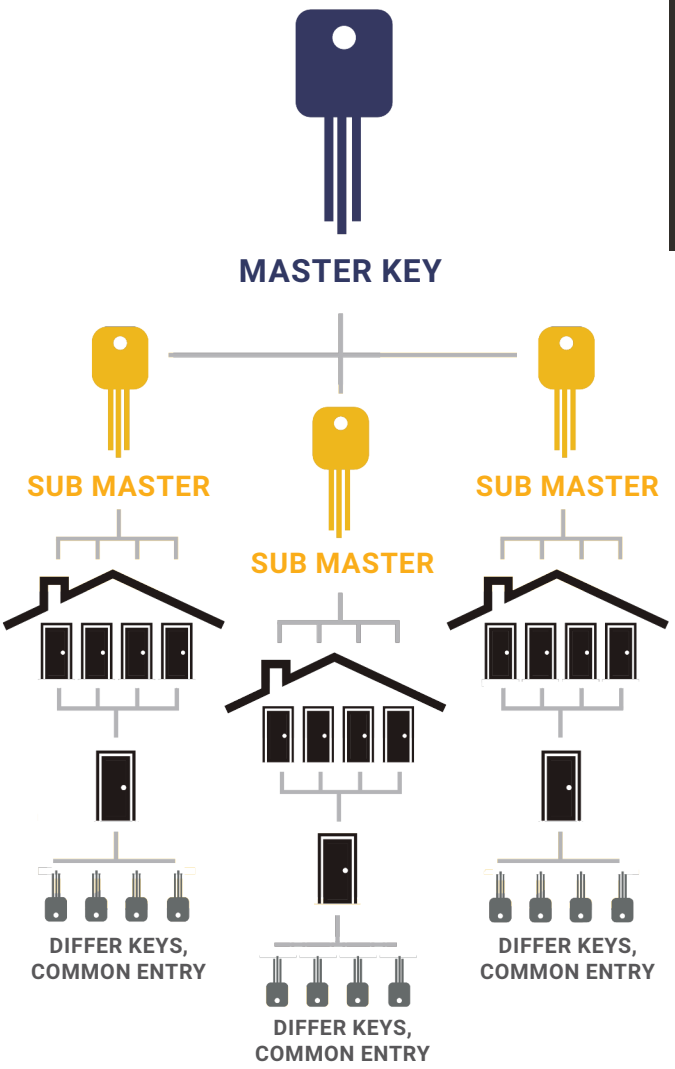

Bespoke master suite options available, contact **sales@brisant-secure.com**

Smart locking
For British doors To British Standards

KM786637
TS621:2018

Secured by Design
Police Preferred Specification

Ultion Nuki is the smart lock designed exclusively for UK doors.



Apple HomeKit · Google Home · Ring Doorbell · Control4 · Amazon Alexa · IFTTT · AirBnB · Nuki app

Manage the door lock through your preferred smart home platform, our free app or your Ultion door key.

Extras include a keypad and key fob.





ULTION | NUKI
The smart lock with Ultion security

- Control your door lock from your phone
- Auto-unlock on approach
- Send electronic guest keys
- Use existing external handle – no drilling or wiring
- Fitted and working to UK doors in minutes



ULTION | NUKI PLUS
All the benefits of Ultion Nuki, plus

- Comes with the rechargeable battery pack as standard
- Connects directly to wifi without a bridge to lock/unlock door from anywhere
- Two colour options – Black and steel or White and Steel

Point camera here for video

The installation kit

Fitting Ultion Nuki is so easy it doesn't come with fixings. The three screws in the current handle and lock is all thats required.



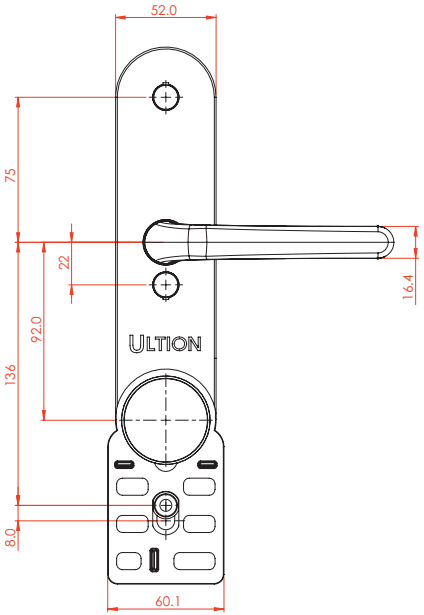

01924 410200
sales@brisant-secure.com www.brisant-secure.com

BRISANTSECURE

Brisant Secure reserves the right to change specification without notice (E&OE)

ULTION NUKI	
Code	Description
UN-WH-30	30mm
UN-WH-35	35mm
UN-WH-40	40mm
UN-WH-45	45mm
UN-WH-50	50mm
UN-WH-55	55mm
UN-WH-60	60mm
UN-WH-65	65mm
UN-WH-70	70mm
UN-WH-75	75mm

ULTION NUKI BUNDLES	
Code	Description
with FINGERPRINT KEYPAD	
;UN-WH-30-BN5	30mm
UN-WH-35-BN5	35mm
UN-WH-40-BN5	40mm
UN-WH-45-BN5	45mm
UN-WH-50-BN5	50mm
UN-WH-55-BN5	55mm
with KEYFOB	
UN-WH-35-BN6	35mm
UN-WH-40-BN6	40mm
UN-WH-45-BN6	45mm
UN-WH-50-BN6	50mm
UN-WH-55-BN6	55mm
with FINGERPRINT KEYPAD and KEYFOB	
UN-WH-30-BN7	30mm
UN-WH-35-BN7	35mm
UN-WH-40-BN7	40mm
UN-WH-45-BN7	45mm
UN-WH-50-BN7	50mm
UN-WH-55-BN7	55mm

ULTION NUKI & KEYPAD/KEY FOB	
Code	Description
UN-WH-30-BN4	30mm
UN-WH-35-BN4	35mm
UN-WH-40-BN4	40mm
UN-WH-45-BN4	45mm
UN-WH-50-BN4	50mm
UN-WH-55-BN4	55mm
UN-WH-60-BN4	60mm
UN-WH-65-BN4	65mm
UN-WH-70-BN4	70mm



ULTION NUKI ACCESSORIES	
Code	Description
UN-CYL-BOX-35	Cylinder 35mm
UN-KF	Key Fob
UN-KPF	Keypad (f/print)
UN-RB-BL	Power Pack Black
UN-RB	White
UN-DS	Door Sensor
UN-SEN	Door Sensor only

The Ultion Nuki Pull

Included in every box







ULTION NUKI PLUS (mount/nuki)	
Code	Description
WHITE MOUNT / WHITE NUKI	
UN-WH-30-PW	30mm
UN-WH-35-PW	35mm
UN-WH-40-PW	40mm
UN-WH-45-PW	45mm
UN-WH-50-PW	50mm
UN-WH-55-PW	55mm
UN-WH-65-PW	65mm
BLACK MOUNT / BLACK NUKI	
UN-BL-30-PB	30mm
UN-BL-35-PB	35mm
UN-BL-40-PB	40mm
UN-BL-45-PB	45mm
UN-BL-50-PB	50mm
UN-BL-55-PB	55mm
UN-BL-60-PB	60mm
UN-BL-65-PB	65mm
UN-BL-70-PB	70mm
UN-BL-75-PB	75mm
CHROME MOUNT / BLACK NUKI	
UN-CH-35-PB	35mm
UN-CH-40-PB	40mm
UN-CH-55-PB	55mm
WHITE MOUNT / WHITE NUKI (Fingerprint Keypad/Keyfob)	
UN-WH-35-PW-BN3-B	35mm
BLACK MOUNT / BLACK NUKI (Fingerprint Keypad/Keyfob)	
UN-BL-35-PB-BN1-B	35mm

ULTION NUKI BUNDLES	
Code	Description
FINGERPRINT KEYPAD (Black mount/black Nuki)	
UN-BL-30-PB-BN1	30mm
UN-BL-35-PB-BN1	35mm
UN-BL-40-PB-BN1	40mm
UN-BL-45-PB-BN1	45mm
UN-BL-50-PB-BN1	50mm
UN-BL-55-PB-BN1	55mm
UN-BL-60-PB-BN1	60mm
UN-BL-70-PB-BN1	70mm
UN-BL-75-PB-BN1	75mm
FINGERPRINT KEYPAD (Black mount/black Nuki)	
UN-BL-30-PB-BN1	30mm
FINGERPRINT KEYPAD (Chrome mount/white Nuki)	
UN-CH-35-PW-BN1	35mm
UN-CH-50-PW-BN1	65mm
FINGERPRINT KEYPAD (Chrome mount/black Nuki)	
UN-CH-35-PB-BN1	35mm
UN-CH-65-PB-BN1	65mm
KEYFOB (Black mount/white Nuki)	
UN-WH-30-PW-BN2	30mm
UN-WH-35-PW-BN2	35mm
UN-WH-40-PW-BN2	40mm
UN-WH-45-PW-BN2	45mm
UN-WH-50-PW-BN2	50mm
UN-WH-55-PW-BN2	55mm
KEYFOB (Black mount/black Nuki)	
UN-BL-30-PB-BN2	30mm
UN-BL-35-PB-BN2	35mm
UN-BL-40-PB-BN2	40mm
UN-BL-45-PB-BN2	45mm
UN-BL-50-PB-BN2	50mm
UN-BL-55-PB-BN2	55mm
KEYFOB (Chrome mount/white Nuki)	
UN-CH-35-PW-BN2	35mm
UN-CH-40-PW-BN2	40mm
KEYFOB (Chrome mount/black Nuki)	
UN-CH-35-PB-BN2	35mm
FINGERPRINT KEYPAD/KEYFOB (Chrome mount/black Nuki)	
UN-CH-30-PB-BN3	30mm
UN-CH-35-PB-BN3	35mm
UN-CH-40-PB-BN3	40mm
UN-CH-45-PB-BN3	45mm
UN-CH-65-PB-BN3	65mm

Ultion Bolt

A multipoint lock with Ultion level protection. Ultion Bolt was developed with expertise, experience and imagination: bolts that engage without lifting the handle, rollers in the lock keeps for perfect seal compression, and built-in Ultion Nuki compatibility.

Even if the door isn't 100% aligned, the independently firing bolts mean the key will still secure it.



The latch bolts deploy automatically when the door has closed, so there's no need to ever lift the handle again.



ULTION NUKI SENSOR	
Code	Description
UN-SEN	Door sensor

The Ultion Bolt has a built-in magnet sensor and housing for the Ultion Nuki transmitter. This means the convenience of automatic locking, keyless entry and electronic guest keys are all just a simple upgrade away.

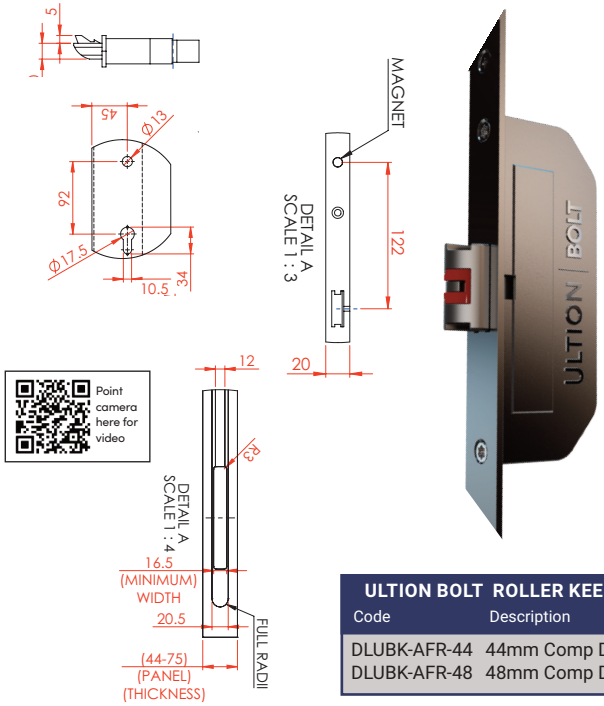

ULTION BOLT ROLLER KEEP	
Code	Description
DLUBK-AFR-44	44mm Comp Door
DLUBK-AFR-48	48mm Comp Door

SENSOR KEEP

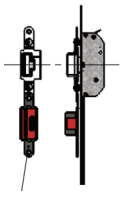

One standard keep position across the 4 MPL's by using common position of top outer unit.

122mm indicator line

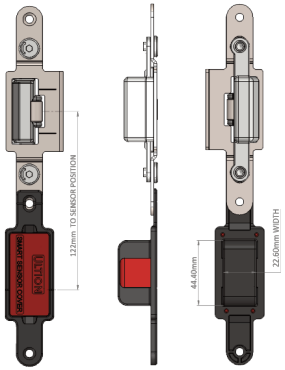

ULTION BOLT SENSOR KEEP	
Code	Description
DLUBK-SEN-44	44mm Comp Door
DLUBK-SEN-48	48mm Comp Door

HERITAGE 3 LATCH	
Code	Description
DLUBC-35-3LAF-H	20FP 35mm
DLUBC-35-3LAF-H-KT44	20FP 35mm KIT 44mm door
DLUBC-45-3LAF-H	20FP 45mm
DLUBC-45-3LAF-H-KT44	20FP 45mm KIT 44mm door
DLUBC-45-3LAF-H-KT48	20FP 45mm KIT 48mm door
DLUBP-35-3LAF-H	16FP 35mm
DLUBP-35-3LAF-H-KT44	16FP 35mm KIT 44mm door
DLUBP-45-3LAF-H	16FP 45mm
DLUBP-45-3LAF-H-KT44	16FP KIT 44mm

CENTRE 3 LATCH	
Code	Description
DLUBC-35-3LAF	20FP 35mm
DLUBC-35-3LAF-KT44	20FP KIT 44mm door
DLUBC-45-3LAF	20FP 45mm
DLUBC-45-3LAF-KT44	20FP KIT 44mm door
DLUBC-45-3LAF-KT48	20FP KIT 48mm door
DLUBP-35-3LAF	16FP 35mm
DLUBP-35-3LAF-KT44	16FP KIT 44mm
DLUBP-45-3LAF-H	16FP 45mm
DLUBP-45-3LAF-H-KT44	16FP KIT 44mm

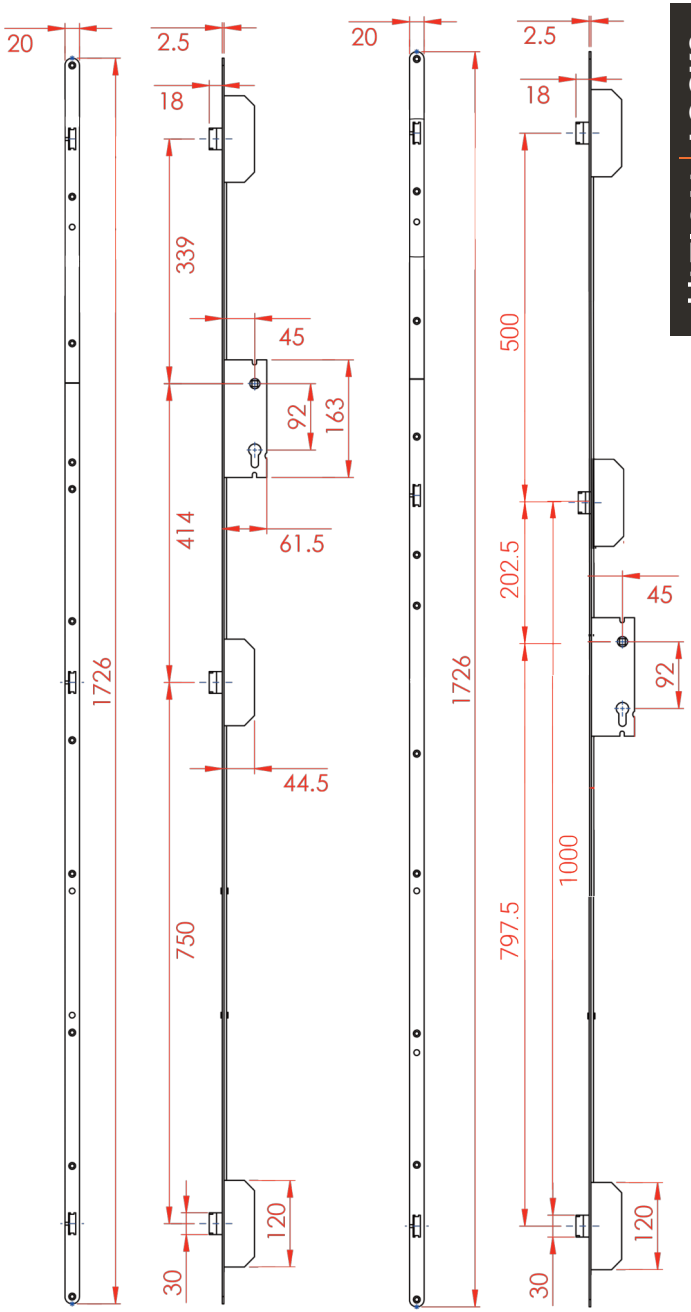

CENTRE 4 LATCH	
Code	Description
DLUBC-35-4LAF	20FP Lev/Lev 35mm
DLUBC-35-4LAF-KT44	20FP Lev/Lev 35mm KIT 44mm door
DLUBC-45-4LAF	20FP Lev/Lev
DLUBC-45-4LAF-KT44	20FP Lev/Lev 45mm KIT 44mm door
DLUBC-45-4LAF-KT484	20FP Lev/Lev 45mm KIT 48mm door
DLUBP-35-4LAF	16FP Lev/Lev 35mm
DLUBP-35-4LAF-KT44	16FP Lev/Lev 35mm KIT 44mm door
DLUBP-45-4LAF	16FP Lev/Lev 45mm
DLUBP-45-4LAF-KT44	16FP Lev/Lev 45mm KIT 44mm door
DLUBP-45-4LAF-KT48	16FP Lev/Lev 45mm KIT 48mm door

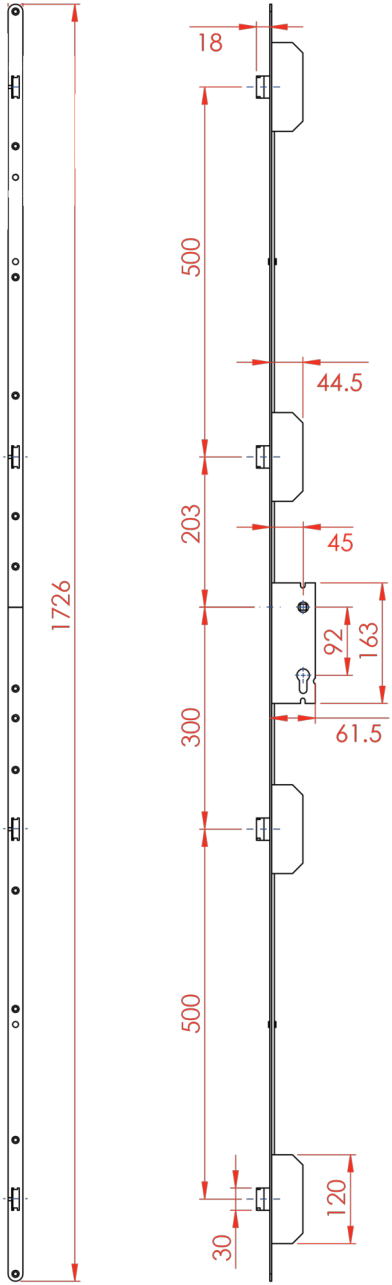

01924 410200
sales@brisant-secure.com www.brisant-secure.com

BRISANTSECURE

Stop losing keys
Start Find My keys



Ultion KeyTag

With Ultion KeyTag, you'll never have to look for your keys again. Instead of opening drawers and checking pockets and purses, all you have to do is press a button on the Apple Find My app (or, if you prefer to do it hands-free, just ask, "Siri, where are my keys?"). Your keys are going to sound an alarm indicating their position.

Still not sure where they are? The Apple Find My app will show on your mobile the exact location of the would-be lost keys, or where they were last time they were near an Apple device.

The key IS the tag - nothing else is needed, powered with a replaceable 2032 battery.



KeyTag comes in 5 different colour combinations, including glow-in-the-dark, so you'll be sure to find a key that suits you.

KEYTAG (X/U KEYS)

Code	Description
DCBSWKBCUTKTBLBL	Black
DCBSWKBCUTKTORBL	Orange
DCBSWKBCUTKTPIBL	Pink
DCBSWKBCUTKTRDBL	Red
DCBSWKBCUTKTYEBL	Yellow

KEYTAG (C KEYS)

Code	Description
DCBSUKBCUTKTBLBL	Black
DCBSUKBCUTKTORBL	Orange
DCBSUKBCUTKTPIBL	Pink
DCBSUKBCUTKTRDBL	Red
DCBSUKBCUTKTYEBL	Yellow

A left behind nudge

Not leaving a key behind is better than finding a lost key. Your phone can send you a notification to tell you when you are travelling away from your key.

KEYTAG (1 STAR PLUS KEYS)

Code	Description
DCBSAKBCUTKTBLBL	Black
DCBSAKBCUTKTORBL	Orange
DCBSAKBCUTKTPIBL	Pink
DCBSAKBCUTKTRDBL	Red
DCBSAKBCUTKTYEBL	Yellow





Ultion KeyCap
Your Ultion keys best friend

Keycaps clip to existing Ultion keys to make them unique to the owner, easy to hold, hides the key number and in a choice of colours.

KEY CAP KIT (U AND X KEYS)	
Code	Description
LCKCKTBLBL-W	Black/Black
LCKCKTBLOR-W	Black/Orange
LCKCKTBLPI-W	Black/Pink
LCKCKTBLRD-W	Black/Red
LCKCKTFPBL-W	Flor. Pink/Black
LCKCKTFPOR-W	Flor. Pink/Orange
LCKCKTFPPI-W	Flor. Pink/Pink
LCKCKTGRRD-W	Green/Red
LCKCKTFPRD-W	Flor. Pink/Red
LCKCKTFYBL-W	Flor. Yellow/Black
LCKCKTFYOR-W	Flor. Yellow/Orange
LCKCKTFYPI-W	Flor. Yellow/Pink
LCKCKTFYRD-W	Flor. Yellow/Red
LCKCKTGRBL-W	Green/Black
LCKCKTGROR-W	Green/Orange
LCKCKTGRPI-W	Green/Pink

KEY CAP KIT (C KEYS)	
Code	Description
KCVKTBLBL	Black/Black
KCVKTBLOR	Black/Orange
KCVKTBLPI	Black/Pink
KCVKTBLRD	Black/Red
KCVKTFPBL	Flor. Pink/Black
KCVKTFPOR	Flor. Pink/Orange
KCVKTFPPI	Flor. Pink/Pink
KCVKTFPRD	Flor. Pink/Red
KCVKTFYBL	Flor. Yellow/Black
KCVKTFYOR	Flor. Yellow/Orange
KCVKTFYPI	Flor. Yellow/Pink
KCVKTFYRD	Flor. Yellow/Red

KEY CAP KIT (1 STAR PLUS)	
Code	Description
DCBSAKBCUTBLOR	Black/Orange
DCBSAKBCUTBLRD	Black/Red
DCBSAKBCUTGRBL	Green/Black

Ultion KeyLight
A built in torch



Fluorescent options

KEYLIGHT KIT (U AND X KEYS)	
Code	Description
LCKLBLBL	Black/Black
LCKLBLOR	Black/Orange
LCKLBLPI	Black/Pink
LCKLBLRD	Black/red
LCKLFPBL	Pink/Black
LCKLFPPI	Flor. Pink/Pink
LCKLFYBL	Flor. Yellow/Black
LCKLGRBL	Green/Black
LCKLGROR	Green/Orange
LCKLGRPI	Green/Pink
LCKLGRRD	Green/Red

KEYLIGHT KIT (C KEYS)	
Code	Description
KCVKLBLBL	Black/Black
KCVKLBLOR	Black/Orange
KCVKLBLPI	Black/Pink
KCVKLBLRD	Black/Red
KCVKLFPBL	Flor. Pink/Black
KCVKLFPOR	Flor. Pink/Orange
KCVKLFPPI	Flor. Pink/Pink
KCVKLFPRD	Flor. Pink/Red
KCVKLFYBL	Flor. Yellow/Black
KCVKLFYOR	Flor. Yellow/Orange
KCVKLFYPI	Flor. Yellow/Pink
KCVKLFYRD	Flor. Yellow/Red

KEYLIGHT (1 STAR PLUS KEYS)	
Code	Description
DCBSAKBCUTKLBLRD	Black/Red



ULTION | Sweet

01924 410200
sales@brisant-secure.com www.brisant-secure.com

BRISANTSECURE

Brisant Secure reserves the right to change specification without notice (E&OE)

Ultion Sweet

Whether you're looking for contemporary or traditional door furniture, country-style or urban, Ultion Sweet stays effortlessly cool.

Ultion Sweet carries multiple coatings of brass and nickel, ensuring it always looks great. We guarantee that the door furniture will still be working and looking sweet for 20 years and the guarantee is between the home owner and Brisant Secure.



Protected with
6 layers of armour

Operation cycle
tested 4 times longer

Surface finish
tested 40 times longer

Water fastness
tested 140 times longer

Knockers
with and without spyhole

Multi-layer Insulated
letterplate

Lever pad and
Ultion 2 star handle
available

6 layers of armour

Sweet carries multiple coatings of brass and nickel, ensuring it always looks great, even after being hammered with salt water for over 8000 hours. That's an incredible 30x more time than required for the flagship EN 1906:2012 corrosion standard.

Cycle test champion

Not all door handles have their build quality tested in a cycle test. But those that do hope to achieve the accreditation standard of 100,000 cycles. Ultion Sweet was still opening and closing doors after 360,000.





ULTION | Sweet

Ultion Sweet handles

The Sweet lever handle brings the Sweet curve form to the traditional lever door handle.

Sweet carries multiple enhanced coatings ensuring it always looks great, even after over 8000 hours in a salt spray chamber.

That's an incredible 30x more time than required for the EN 1906:2012 corrosion standard.





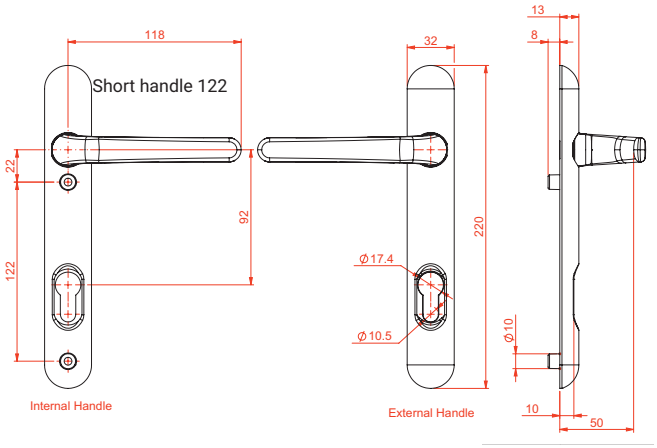

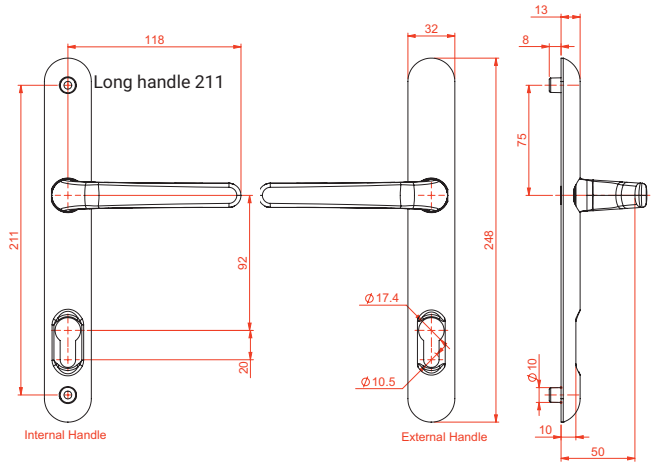

TECHNICAL INFORMATION
Coatings: Copper/Nickel/Chrome/PVD

GUARANTEES	
Cycle test	Over 360,000
Finish	20 years
Mechanical	10 years

01924 410200
sales@brisant-secure.com www.brisant-secure.com

BRISANTSECURE

Brisant Secure reserves the right to change specification without notice (E&OE)

LEVER / LEVER 122	
Code	Description
LCSH-LSAG-UNI	ANTH. GREY
LCSH-LSBL-UNI	BLACK
LCSH-LSCH-UNI	CHROME
LCSH-LSGO-UNI	GOLD
LCSH-LSRG-UNI	ROSE GOLD
LCSH-LSSN-UNI	SATIN NICKEL
LCSH-LSSS-UNI	STAINLESS
LCSH-LSWH-UNI	WHITE

LEVER / LEVER 122 (EXT HALF)	
Code	Description
LCSH-LSAG-E-UNI	ANTH. GREY
LCSH-LSBL-E-UNI	BLACK
LCSH-LSCH-E-UNI	CHROME
LCSH-LSGO-E-UNI	GOLD Ext
LCSH-LSRG-E-UNI	ROSE GOLD
LCSH-LSSN-E-UNI	SATIN NICKEL
LCSH-LSSS-E-UNI	STAINLESS
LCSH-LSWH-E-UNI	WHITE

LEVER / LEVER 211	
Code	Description
LCSH-LLAG-UNI	ANTH. GREY
LCSH-LLBL-UNI	BLACK
LCSH-LLCH-UNI	CHROME
LCSH-LLGO-UNI	GOLD
LCSH-LLRG-UNI	ROSE GOLD
LCSH-LLSN-UNI	SATIN NICKEL
LCSH-LLSS-UNI	STAINLESS
LCSH-LLWH-UNI	WHITE

LEVER / LEVER 211 (EXT HALF)	
Code	Description
LCSH-LLAG-E-UNI	ANTH GREY
LCSH-LLBL-E-UNI	BLACK
LCSH-LLCH-E-UNI	CHROME
LCSH-LLGO-E-UNI	GOLD
LCSH-LLRG-E-UNI	ROSE GOLD
LCSH-LLSN-E-UNI	SATIN NICKEL
LCSH-LLSS-E-UNI	STAINLESS
LCSH-LLWH-E-UNI	WHITE

LEVER / LEVER 211 (92 IN 62 OUT)	
Code	Description
LCSH-LLBL9262-UNI	BLACK
LCSH-LLCH9262-UNI	CHROME
LCSH-LLGO9262-UNI	GOLD
LCSH-LLRG9262-UNI	ROSE G
LCSH-LLSI9262-UNI	SILVER
LCSH-LLSN9262-UNI	SATIN
LCSH-LLSS9262-UNI	STAINLESS
LCSH-LLWH9262-UNI	WHITE

LEVER PAD 211	
Code	Description
LCSH-LPAG-UNI	ANTH. GREY
LCSH-LPBL-UNI	BLACK
LCSH-LPCH-UNI	CHROME
LCSH-LPGO-UNI	GOLD
LCSH-LPRG-UNI	ROSE GOLD
LCSH-LPSN-UNI	SATIN NICKEL
LCSH-LPSS-UNI	STAINLESS
LCSH-LPWH-UNI	WHITE

LEVER PAD 211 (92 IN)	
Code	Description
LCSH-LPCH92	CHROME
LCSH-LPGO92	GOLD
LCSH-LPSI92	SILVER
LCSH-LPSN92	SATIN NICKEL
LCSH-LPSS92	STAINLESS
LCSH-LPWH92	WHITE

LEVER PAD 211 (EXT HALF)	
Code	Description
LCSH-LPBL-E	BLACK
LCSH-LPCH-E	CHROME
LCSH-LPSS-E	STAINLESS
LCSH-LPRG-UNI	ROSE GOLD

Handle codes ending UNI come with two screw and spindle packs, one for doors less than 50mm thick and another for doors over 50mm.

It is possible to order handles and spindle packs separately.

SPINDLE PACKS INCLUDING 2 SCREWS

LEVER / LEVER - COMP	
Code	Description
LCSH-SPAGCOMP	ANTHRACITE
LCSH-SPBLCOMP	BLACK
LCSH-SPCHCOMP	CHROME
LCSH-SPGOCOMP	GOLD
LCSH-SPNICOMP	NICKEL
LCSH-SPRGCOMP	ROSE GOLD
LCSH-SPWHCOMP	WHITE

LEVER PAD - COMP	
Code	Description
LCSH-SPAGCOMP-LP	ANTH.
LCSH-SPBLCOMP-LP	BLACK
LCSH-SPCHCOMP-LP	CHROME
LCSH-SPGOCOMP-LP	GOLD
LCSH-SPNICOMP-LP	NICKEL
LCSH-SPRGCOMP-LP	ROSE GOLD
LCSH-SPWHCOMP-LP	WHITE

LEVER / LEVER- PVC	
Code	Description
LCSH-SPAGPVC	ANTHRACITE.
LCSH-SPBLPVC	BLACK
LCSH-SPCHPVC	CHROME
LCSH-SPGOPVC	GOLD
LCSH-SPNIPVC	NICKEL
LCSH-SPRGPVC	ROSE GOLD
LCSH-SPWHPVC	WHITE

LEVER PAD - PVC	
Code	Description
LCSH-SPAGPVC-LP	ANTH.
LCSH-SPBLPVC-LP	BLACK
LCSH-SPCHPVC-LP	CHROME
LCSH-SPGOPVC-LP	GOLD
LCSH-SPNIPVC-LP	NICKEL
LCSH-SPRGPVC-LP	ROSE GOLD
LCSH-SPWHPVC-LP	WHITE

LEVER / LEVER - INTERMEDIATE	
Code	Description
LCSH-SPAG60	ANTHRACITE.
LCSH-SPBL60	BLACK
LCSH-SPCH60	CHROME
LCSH-SPGO60	GOLD
LCSH-SPNI60	NICKEL
LCSH-SPRG60	ROSE GOLD
LCSH-SPWH60	WHITE

LEVER PAD - INTERMEDIATE	
Code	Description
LCSH-SPAG60-LP	ANTH.
LCSH-SPBL60-LP	BLACK
LCSH-SPCH60-LP	CHROME
LCSH-SPGO60-LP	GOLD
LCSH-SPNI60-LP	NICKEL
LCSH-SPRG60-LP	ROSE GOLD
LCSH-SPWH60-LP	WHITE

Ultion 2 Star

The fully reinforced Ultion handle won't be crushed by mole grips and the fixings thread through hardened steel bosses to stop twisting.

Ultion doesn't sacrifice security for appearance or appearance for security.



Handle codes ending UNI come with two screw and spindle packs, one for doors less than 50mm thick and another for doors over 50mm. It is possible to order handles and spindle packs separately.



LEVER / LEVER 122

Code	Description
LC2S-LSAG-UNI	ANTHRACITE
LC2S-LSBL-UNI	BLACK
LC2S-LSCH-UNI	CHROME
LC2S-LSGO-UNI	GOLD
LC2S-LSRG-UNI	ROSE GOLD
LC2S-LSSN-UNI	SATIN NICKEL
LC2S-LSWH-UNI	WHITE

LEVER / LEVER 211

Code	Description
LC2S-LLAG-UNI	ANTHRACITE
LC2S-LLBL-UNI	BLACK
LC2S-LLCH-UNI	CHROME
LC2S-LLGO-UNI	GOLD
LC2S-LLRG-UNI	ROSE GOLD
LC2S-LLSN-UNI	SATIN NICKEL
LC2S-LLWH-UNI	WHITE

LEVER PAD 211

Code	Description
LC2S-LPAG-UNI	ANTHRACITE
LC2S-LPBL-UNI	BLACK
LC2S-LPCH-UNI	CHROME

LEVER PAD 211

Code	Description
LC2S-LPGO-UNI	GOLD
LC2S-LPRG-UNI	ROSE GOLD
LC2S-LPSN-UNI	SATIN NICKEL
LC2S-LPWH-UNI	WHITE

SPINDLE PACKS INCLUDING 2 SCREWS

LEVER / LEVER - COMP

Code	Description
LC2S-SPAGCOMP	ANTH.
LC2S-SPBLCOMP	BLACK
LC2S-SPCHCOMP	CHROME
LC2S-SPGOCOMP	GOLD
LC2S-SPRGCOMP	R. GOLD
LC2S-SPSNCOMP	S.NICKEL
LC2S-SPWHCOMP	WHITE

LEVER PAD - COMP

Code	Description
LC2S-SPAGCOMP-LP	ANTH.
LC2S-SPBLCOMP-LP	BLACK
LC2S-SPCHCOMP-LP	CHROME
LC2S-SPGOCOMP-LP	GOLD
LC2S-SPRGCOMP-LP	R. GOLD
LC2S-SPSNCOMP-LP	S.NICKEL
LC2S-SPWHCOMP-LP	WHITE

LEVER / LEVER- PVC

Code	Description
LC2S-SPAGPVC	ANTH.
LC2S-SPBLPVC	BLACK
LC2S-SPCHPVC	CHROME
LC2S-SPGOPVC	GOLD
LC2S-SPRGPVC	R.GOLD
LC2S-SPSNPVC	S.NICKEL
LC2S-SPWHPVC	WHITE

LEVER PAD - PVC

Code	Description
LC2S-SPAGPVC-LP	ANTH.
LC2S-SPBLPVC-LP	BLACK
LC2S-SPCHPVC-LP	CHROME
LC2S-SPGOPVC-LP	GOLD
LC2S-SPRGPVC-LP	R. GOLD
LC2S-SPSNPVC-LP	S. NICKEL
LC2S-SPWHPVC-LP	WHITE

LEVER / LEVER - INTERMEDIATE

Code	Description
LC2S-SPAG60	ANTH.
LC2S-SPBL60	BLACK
LC2S-SPCH60	CHROME
LC2S-SPGO60	GOLD
LC2S-SPRG60	R. GOLD
LC2S-SPSN60	S.NICKEL
LC2S-SPWH60	WHITE

LEVER PAD - INTERMEDIATE

Code	Description
LC2S-SPAG60-LP	ANTH.
LC2S-SPBL60-LP	BLACK
LC2S-SPCH60-LP	CHROME
LC2S-SPGO60-LP	GOLD
LC2S-SPRG60-LP	R.GOLD
LC2S-SPSN60-LP	S.NICKEL
LC2S-SPWH60-LP	WHITE

01924 410200
sales@brisant-secure.com www.brisant-secure.com

BRISANTSECURE

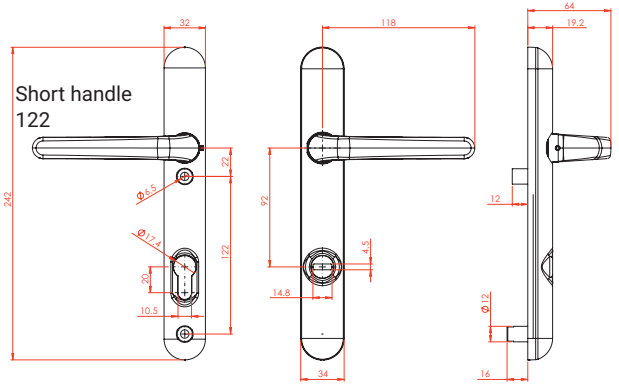

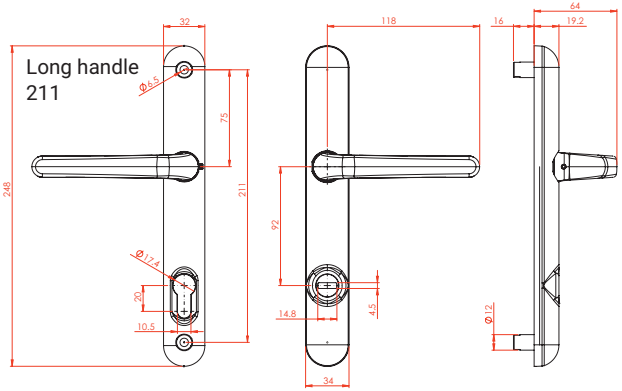

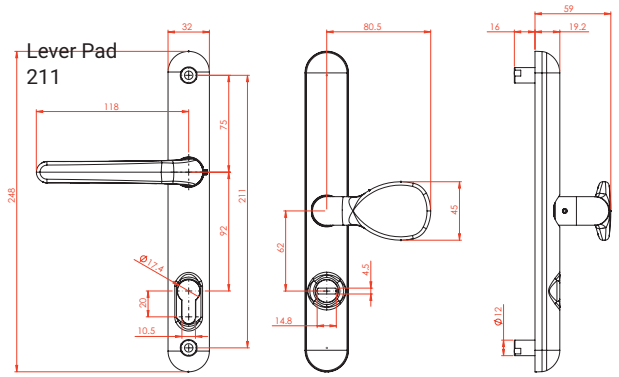

Ultion 2 Star Plus Lock the door with a key or lock it with the internal switch

All the benefits of the Ultion 2 star but with the addition of a switch that means you can lock and unlock the door without a key and still be secure.

Point camera here for video



The internal switch on the Ultion 2 star Plus locks the door spindle. If the spindle can't turn the door can't open.

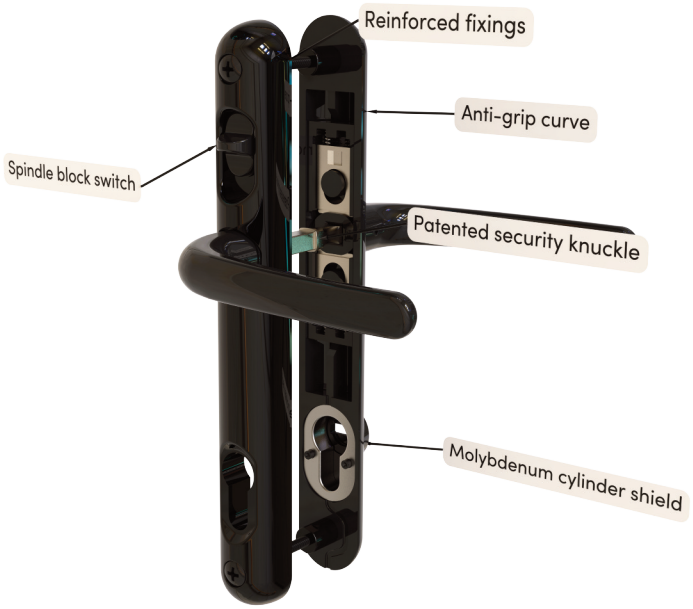

The suited security handle

Short handle 122

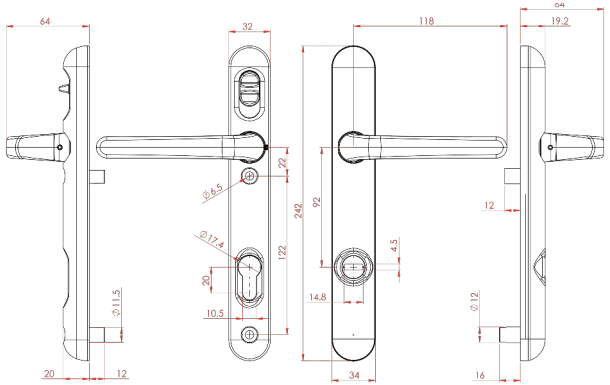

Long handle 211

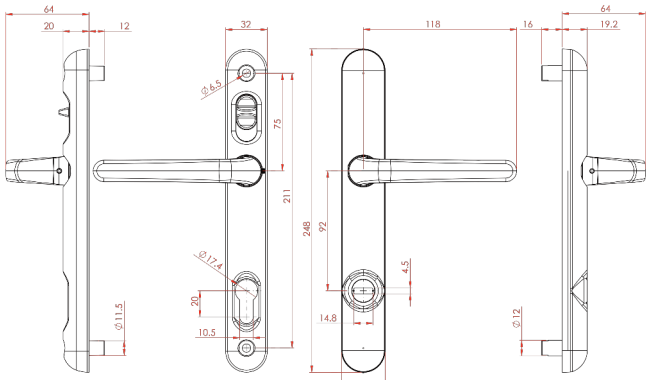

LEVER / LEVER 122	
Code	Description
LCD2-LSAG-UNI	ANTH.
LCD2-LSBL-UNI	BLACK
LCD2-LSCH-UNI	CHROME
LCD2-LSGO-UNI	GOLD
LCD2-LSRG-UNI	R.GOLD
LCD2-LSSN-UNI	S.NICKEL
LCD2-LSWH-UNI	WHITE

LEVER / LEVER 211	
Code	Description
LCD2-LLAG-UNI	ANTH.
LCD2-LLBL-UNI	BLACK
LCD2-LLCH-UNI	CHROME
LCD2-LLGO-UNI	GOLD
LCD2-LLRG-UNI	R.GOLD
LCD2-LLSN-UNI	S. NICKEL
LCD2-LLWH-UNI	WHITE

SPINDLE PACKS INCLUDING 2 SCREWS

LEVER / LEVER - COMP	
Code	Description
LCD2-SPCOMPAG	ANTH.
LCD2-SPCOMPBL	BLACK
LCD2-SPCOMPCH	CHROME
LCD2-SPCOMPGO	GOLD
LCD2-SPCOMPRG	R. GOLD
LCD2-SPCOMPSN	S. NICKEL
LCD2-SPCOMPWH	WHITE

LEVER / LEVER - PVC	
Code	Description
LCD2-SPPVCAG	ANTH.
LCD2-SPPVCBL	BLACK
LCD2-SPPVCCH	CHROME
LCD2-SPPVCGO	GOLD
LCD2-SPPVCRG	R. GOLD
LCD2-SPPVCSN	S. NICKEL
LCD2-SPPVCWH	WHITE

Handle codes ending UNI come with two screw and spindle packs, one for doors less than 50mm thick and another for doors over 50mm. It is possible to order handles and spindle packs separately.

01924 410200
sales@brisant-secure.com www.brisant-secure.com

ULTION SWEET PATIO HANDLES

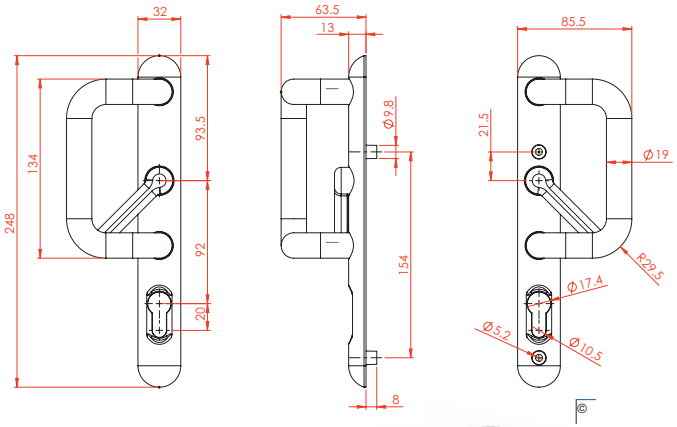

PATIO HANDLE INC SPINDLE	
Code	Description
LCPH-AG	ANTHRACITE.
LCPH-BL	BLACK
LCPH-CH	CHROME
LCPH-GO	GOLD
LCPH-RG	ROSE GOLD
LCPH-SN	SATIN NICKEL
LCPH-WH	WHITE

For external grip only add -EG to the end of the code



Its edgeless design deters intruders, while the robust brass and nickel coatings ensure long-lasting charm.

ULTION SWEET DDA HANDLES

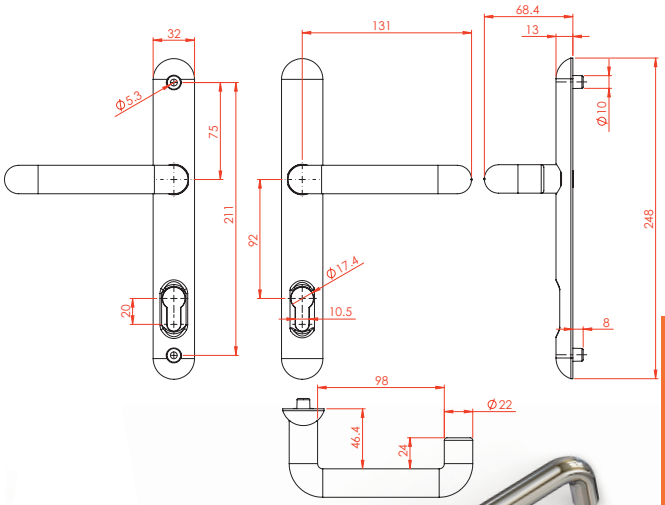

LEVER / LEVER 211INC SPINDLE	
Code	Description
LCSH-LLBL-DDA	BLACK
LCSH-LLCH-DDA	CHROME
LCSH-LLGO-DDA	GOLD
LCSH-LLSN-DDA	SATIN NICKEL
LCSH-LLWH-DDA	WHITE

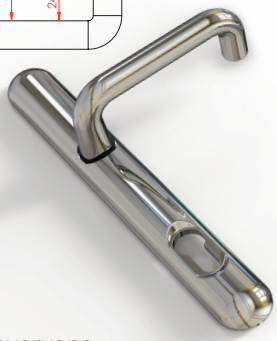

Guaranteed stylish access for everyone whilst also meeting DDA requirements.

ULTION SWEET BLANKING PLATE

BLANKING PLATE UNIVERSAL	
Code	Description
LCSH-BUAG	ANTHRACITE
LCSH-BUBL	BLACK
LCSH-BUCH	CHROME
LCSH-BUGO	GOLD
LCSH-BURG	ROSE GOLD
LCSH-BUSN	SATIN NICKEL
LCSH-BUWH	WHITE

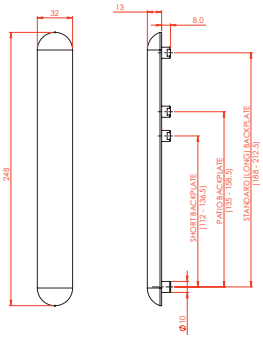



Point camera here for video

ULTION Sweet

PATIO / DDA / BLANKING PLATE

01924 410200

sales@brisant-secure.com www.brisant-secure.com

BRISANTSECURE

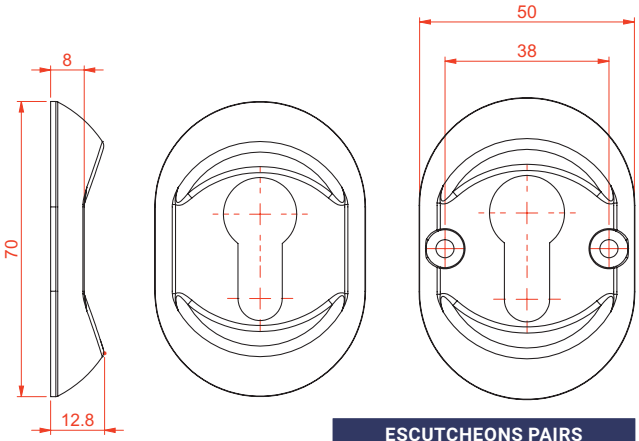

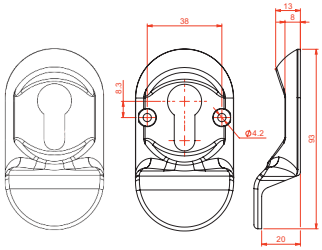

ESCUTCHEONS PAIRS	
Code	Description
LCSE-AG	ANTHRACITE
LCSE-BL	BLACK
LCSE-CH	CHROME
LCSE-GO	GOLD
LCSE-RG	ROSE GOLD
LCSE-SN	SATIN NICKEL
LCSE-SS	STAINLESS

ESCUTCHEONS (INTERNAL PULL)	
Code	Description
LCSPE-BL	BLACK
LCSPE-CH	CHROME
LCSPE-GO	GOLD
LCSPE-RG	ROSE GOLD
LCSPE-SS	STAINLESS
LCSPE-SS	SILVER

ESCUTCHEONS PAIRS (PULL)	
Code	Description
LCSP-BL	BLACK
LCSP-CH	CHROME
LCSP-GO	GOLD
LCSP-RG	ROSE GOLD
LCSP-SN	SATIN NICKEL
LCSP-SS	STAINLESS
LCSP-SI	SILVER

ESCUTCHEONS PULL INT HALF	
Code	Description
LCSP-BL-I	BLACK
LCSP-CH-I	CHROME
LCSP-GO-I	GOLD
LCSP-SS-I	STAINLESS
LCSP-SI-I	SILVER

ESCUTCHEONS PULL EXT HALF	
Code	Description
LCSP-BL-E	BLACK
LCSP-CH-E	CHROME
LCSP-GO-E	GOLD
LCSP-SS-E	STAINLESS
LCSP-Si-E	SILVER



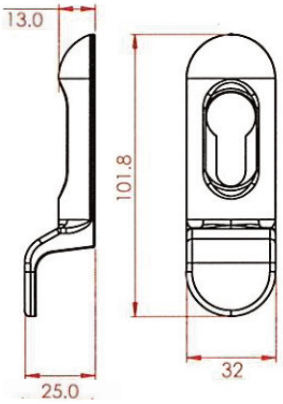

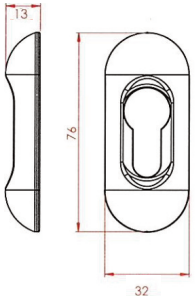

SLIM PULL INC BASEPLATE	
Code	Description
LCEP-AG	ANTHRACITE
LCEP-BL	BLACK
LCEP-CH	CHROME
LCEP-GO	GOLD
LCEP-RG	ROSE GOLD
LCEP-SI	SILVER
LCEP-SN	SATIN NICKEL
LCEP-WH	WHITE

SLIM INC BASEPLATE	
Code	Description
LCES-AG	ANTHRACITE
LCES-BL	BLACK
LCES-CH	CHROME
LCES-GO	GOLD
LCES-RG	ROSE GOLD
LCES-SN	SATIN NICKEL
LCES-WH	WHITE

BLACK	
Code	Desc
LCSN-BL-0	0
LCSN-BL-1	1
LCSN-BL-2	2
LCSN-BL-3	3
LCSN-BL-4	4
LCSN-BL-5	5
LCSN-BL-6	6
LCSN-BL-7	7
LCSN-BL-8	8
LCSN-BL-9	9
LCSN-BL-A	A
LCSN-BL-B	B
LCSN-BL-C	C

CHROME	
Code	Desc
LCSN-CH-0	0
LCSN-CH-1	1
LCSN-CH-2	2
LCSN-CH-3	3
LCSN-CH-4	4
LCSN-CH-5	5
LCSN-CH-6	6
LCSN-CH-7	7
LCSN-CH-8	8
LCSN-CH-9	9
LCSN-CH-A	A
LCSN-CH-B	B
LCSN-CH-C	C

STAINLESS STEEL	
Code	Desc
LCSN-SS-0	0
LCSN-SS-1	1
LCSN-SS-2	2
LCSN-SS-3	3
LCSN-SS-4	4
LCSN-SS-5	5
LCSN-SS-6	6
LCSN-SS-7	7
LCSN-SS-8	8
LCSN-SS-9	9
LCSN-SS-A	A
LCSN-SS-B	B
LCSN-SS-C	C



SATIN NICKEL	
Code	Desc
LCSN-SN-0	0
LCSN-SN-1	1
LCSN-SN-2	2
LCSN-SN-3	3
LCSN-SN-4	4
LCSN-SN-5	5
LCSN-SN-6	6
LCSN-SN-7	7
LCSN-SN-8	8
LCSN-SN-9	9
LCSN-SN-A	A
LCSN-SN-B	B
LCSN-SN-C	C

GOLD	
Code	Desc
LCSN-GO-0	0
LCSN-GO-1	1
LCSN-GO-2	2
LCSN-GO-3	3
LCSN-GO-4	4
LCSN-GO-5	5
LCSN-GO-6	6
LCSN-GO-7	7
LCSN-GO-8	8
LCSN-GO-9	9
LCSN-GO-A	A
LCSN-GO-B	B
LCSN-GO-C	C

ROSE GOLD	
Code	Desc
LCSN-RG-0	0
LCSN-RG-1	1
LCSN-RG-2	2
LCSN-RG-3	3
LCSN-RG-4	4
LCSN-RG-5	5
LCSN-RG-6	6
LCSN-RG-7	7
LCSN-RG-8	8
LCSN-RG-9	9
LCSN-RG-A	A
LCSN-RG-B	B
LCSN-RG-C	C



A choice of two distinct styles - the sleek modern design or the elegant traditional urn style.

CONTEMPORARY	
Code	Description
LCSK-BL-U	BLACK
LCSK-CH-U	CHROME
LCSK-GO-U	GOLD
LCSK-RG-U	ROSE GOLD
LCSK-SN-U	SATIN NICKEL
LCSK-SS-U	STAINLESS

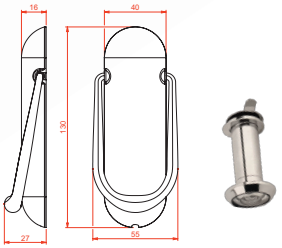

CONTEMPORARY WITH VIEW HOLE	
Code	Description
LCSK-BL-UV	BLACK
LCSK-CH-UV	CHROME
LCSK-GO-UV	GOLD
LCSK-RG-UV	ROSE GOLD
LCSK-SN-UV	SATIN NICKEL
LCSK-SS-UV	STAINLESS

VIEWER / DOOR 35-60 / 23-48	
Code	Description
VIEW1-BL	BLACK
VIEW1-CH	CHROME
VIEW1-GO	GOLD
VIEW1-NI	SATIN
VIEW1-RG	GOLD
VIEW1-WH	WHITE

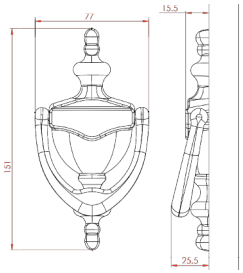

VIEWER / DOOR 60-85 / 48-73	
Code	Description
VIEW2-BL	BLACK
VIEW2-CH	CHROME
VIEW2-GO	GOLD
VIEW2-NI	SATIN
VIEW2-RG	ROSE GOLD
VIEW2-WH	WHITE

CLASSIC	
Code	Description
LCSK-BL-C	BLACK
LCSK-CH-C	CHROME
LCSK-GO-C	GOLD
LCSK-RG-C	ROSE GOLD
LCSK-SS-C	ST STEEL

CLASSIC WITH VIEW HOLE	
Code	Description
LCSK-BL-CV	BLACK
LCSK-CH-CV	CHROME
LCSK-GO-CV	GOLD
LCSK-RG-CV	ROSE GOLD
LCSK-SS-CV	STAINLESS

ULTION SWEET LETTER PLATE

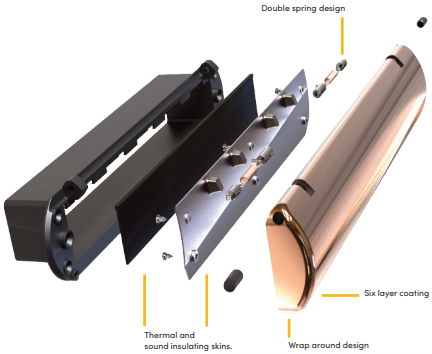

The traditional frame and flap design is replaced with a single wrap around design to stop the elements creeping through the butt joints.

Two internal skins bring additional sound and thermal insulation.

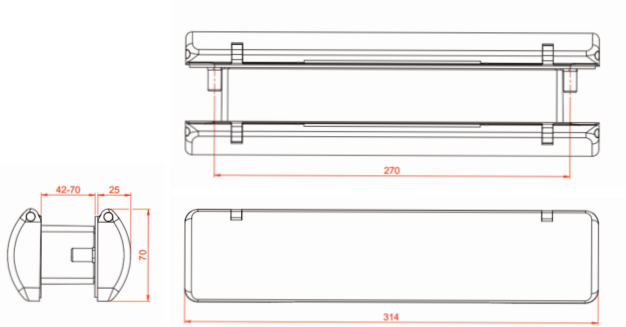

LETTER PLATE - 20/35MM PANEL	
Code	Description
LCSL-BLSQ-P	BLACK
LCSL-CHSQ-P	CHROME
LCSL-GOSQ-P	GOLD SQUARE
LCSL-RGSQ-P	ROSE GOLD
LCSL-SSSQ-P	STAINLESS
LCSL-WHSQ-P	WHITE

LETTER PLATE	
Code	Description
LCSL-BLSQ	BLACK
LCSL-CHSQ	CHROME
LCSL-GOSQ	GOLD
LCSL-RGSQ	ROSE GOLD
LCSL-SNSQ	SAT NICKEL
LCSL-SSSQ	STAINLESS
LCSL-WHSQ	WHITE



ULTION SWEET LETTERGUARD

The Ultion Sweet LetterGuard stops an intruder from accessing the lock from inside via 'fishing attacks' whilst giving clear access for the post. LetterGuard achieves TS008 without compromising the Sweet design.

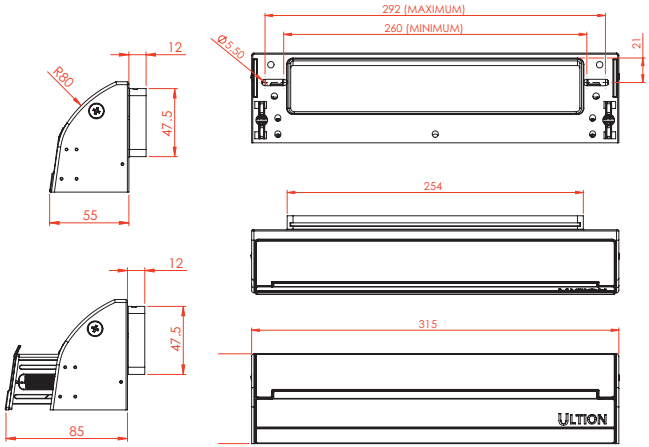

Point camera here for video

LETTERGUARD INTERNAL	
Code	Description
LCLG-BL	BLACK
LCLG-CH	CHROME
LCLG-SI	SILVER
LCLG-S	SATIN NICKEL
LCLG-WH	WHITE

LETTER PLATE / LETTERGUARD	
Code	Description
LCSL-AGSQ-LG	ANTH GREY
LCSL-BLSQ-LG	BLACK
LCSL-CHSQ-LG	CHROME
LCSL-GOSQ-LG	GOLD
LCSL-SISQ-LG	SILVER
LCSL-SNSQ-LG	SATIN NICKEL
LCSL-WHSQ-LG	WHITE



ULTION SWEET INLINE WINDOW HANDLE

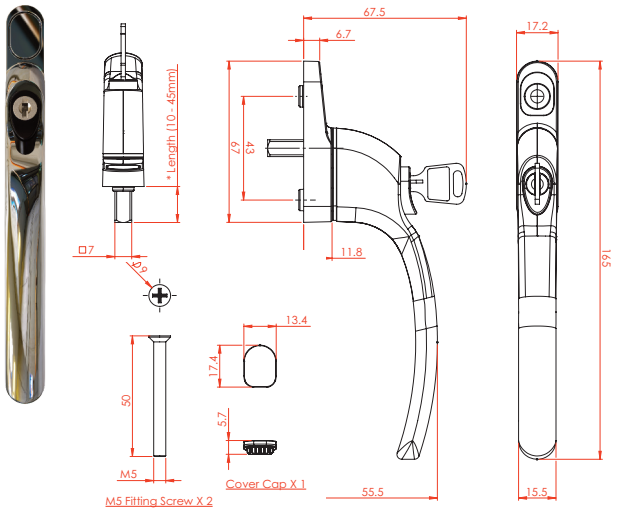

HANDLE INLINE	
Code	Description
LCWH-AG-10	ANTH. 10mm
LCWH-BL-10	BLACK 10mm
LCWH-BL-15	BLACK 15mm
LCWH-BL-30	BLACK 30mm
LCWH-BL-35	BLACK 35mm
LCWH-BL-40	BLACK 40mm
LCWH-BL-45	BLACK 45mm
LCWH-CH-10	CHROME 10mm
LCWH-CH-15	CHROME 15mm
LCWH-CH-30	CHROME 30mm
LCWH-CH-35	CHROME 35mm
LCWH-CH-40	CHROME 40mm
LCWH-CH-45	CHROME 45mm
LCWH-GO-10	GOLD 10mm
LCWH-GO-15	GOLD 15mm
LCWH-GO-30	GOLD 30mm
LCWH-GO-35	GOLD 35mm
LCWH-GO-40	GOLD 40mm
LCWH-GO-45	GOLD 45mm

HANDLE INLINE	
Code	Description
LCWH-SI-10	SILVER 10mm
LCWH-SI-15	SILVER 15mm
LCWH-SI-30	SILVER 30mm
LCWH-SI-35	SILVER 35mm
LCWH-SI-40	SILVER 40mm
LCWH-SI-45	SILVER 45mm
LCWH-SN-10	S. NICKEL 10mm
LCWH-SN-15	S. NICKEL 15mm
LCWH-SN-30	S. NICKEL 30mm
LCWH-SN-35	S.NICKEL 35mm
LCWH-SN-40	S.NICKEL 40mm
LCWH-SN-45	S.NICKEL 45mm
LCWH-WH-10	WHITE 10mm
LCWH-WH-15	WHITE 15mm
LCWH-WH-30	WHITE 30mm
LCWH-WH-35	WHITE 35mm
LCWH-WH-40	WHITE 40mm
LCWH-WH-45	WHITE 45mm

NON LOCKING	
Code	Description
LCWH-CH-40-NL	CHROME 40mm
LCWH-GO-40-NL	GOLD 40mm
LCWH-WH-40-NL	WHITE 40mm

ULTION SWEET CRANKED WINDOW HANDLE

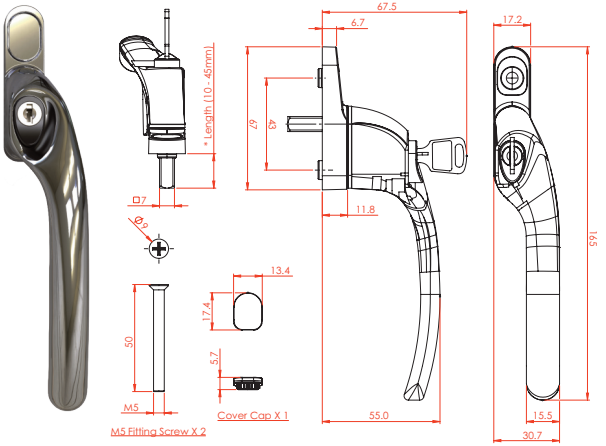

HANDLE CRANKED Left/Right	
Code	Description
LCWH-BL-10-L	BLACK 10mm
LCWH-BL-10-R	BLACK 10mm
LCWH-BL-15-L	BLACK 15mm
LCWH-BL-15-R	BLACK 15mm
LCWH-BL-30-L	BLACK 30mm
LCWH-BL-30-R	BLACK 30mm
LCWH-BL-35-L	BLACK 35mm
LCWH-BL-35-R	BLACK 35mm
LCWH-BL-40-L	BLACK 40mm
LCWH-BL-40-R	BLACK 40mm
LCWH-CH-10-L	CHROME 10mm
LCWH-CH-10-R	CHROME 10mm
LCWH-CH-15-L	CHROME 15mm
LCWH-CH-15-R	CHROME 15mm
LCWH-CH-30-L	CHROME 30mm
LCWH-CH-30-R	CHROME 30mm
LCWH-CH-35-L	CHROME 35mm
LCWH-CH-35-R	CHROME 35mm
LCWH-CH-40-L	CHROME 40mm
LCWH-CH-40-R	CHROME 40mm
LCWH-GO-10-L	GOLD 10mm
LCWH-GO-10-R	GOLD 10mm
LCWH-GO-15-L	GOLD 15mm
LCWH-GO-15-R	GOLD 15mm
LCWH-GO-30-L	GOLD 30mm
LCWH-GO-30-R	GOLD 30mm
LCWH-GO-35-L	GOLD 35mm
LCWH-GO-35-R	GOLD 35mm
LCWH-GO-40-L	GOLD 40mm
LCWH-GO-40-R	GOLD 40mm

HANDLE CRANKED Left/Right	
Code	Description
LCWH-SI-10-L	SILVER 10mm
LCWH-SI-10-R	SILVER 10mm
LCWH-SI-15-L	SILVER 15mm
LCWH-SI-15-R	SILVER 15mm
LCWH-SI-30-L	SILVER 30mm
LCWH-SI-30-R	SILVER 30mm
LCWH-SI-35-L	SILVER 35mm
LCWH-SI-35-R	SILVER 35mm
LCWH-SI-40-L	SILVER 40mm
LCWH-SI-40-R	SILVER 40mm
LCWH-SN-10-L	S. NICKEL 10mm
LCWH-SN-10-R	S. NICKEL 10mm
LCWH-SN-15-L	S. NICKEL 15mm
LCWH-SN-15-R	S. NICKEL 15mm
LCWH-SN-30-L	S. NICKEL 30mm
LCWH-SN-30-R	S. NICKEL 30mm
LCWH-SN-35-L	S. NICKEL 35mm
LCWH-SN-35-R	S. NICKEL 35mm
LCWH-SN-40-L	S. NICKEL 40mm
LCWH-SN-40-R	S. NICKEL 40mm
LCWH-WH-10-L	WHITE 10mm
LCWH-WH-10-R	WHITE 10mm
LCWH-WH-15-L	WHITE 15mm
LCWH-WH-15-R	WHITE 15mm
LCWH-WH-30-L	WHITE 30mm
LCWH-WH-30-R	WHITE 30mm
LCWH-WH-35-L	WHITE 35mm
LCWH-WH-35-R	WHITE 35mm
LCWH-WH-40-L	WHITE 40mm
LCWH-WH-40-R	WHITE 40mm

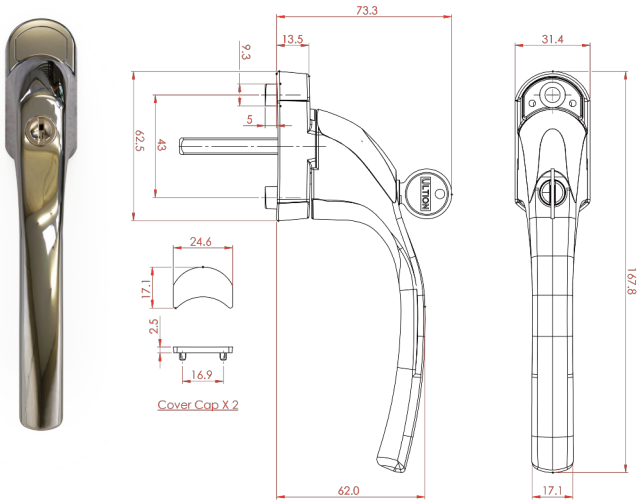

TILT AND TURN	
Code	Description
LCTB-SI-30	SILVER 30mm
LCTB-SI-40	SILVER 40mm
LCTB-WH-30	WHITE 30mm
LCTB-WH-40	WHITE 40mm
LCTB-BL-30	BLACK 30mm
LCTB-BL-40	BLACK 40mm
LCTB-CH-30	CHROME 30mm
LCTB-CH-40	CHROME 40mm
LCTB-SN-30	S. NICKEL 30mm
LCTB-SN-40	S. NICKEL 40mm
LCTB-GO-30	GOLD 30mm
LCTB-GO-40	GOLD 40mm
LCTB-RG-30	R.GOLD 30mm
LCTB-RG-40	R.GOLD 40mm
LCTB-AG-30	ANTH. 30mm
LCTB-AG-40	ANTH. 40mm

TILT AND TURN NON LOCKING	
Code	Description
LCTB-AG-40-NL	ANTH.40mm
LCTB-SI-40-NL	SILVER 40mm
LCTB-SN-40-NL	S.NICKEL 40mm
LCTB-BL-40-NL	BLACK 40mm
LCTB-WH-40-NL	WHITE 40mm
LCTB-GO-40-NL	GOLD 40mm
LCTB-CH-40-NL	CHROME 40mm



KM 598324

Brisant D

A dimple key platform ideal for a wide range of commercial uses. Comprising euros, rims, screw ins, ovals, scandinavian oval and bullet locks. All of which can be keyed alike.

BRISANT D - KEY KEY	
Code	Description
DCBSD2828D	28 x 28
DCBSD2828DX	28 x 28 small cam
DCBSD2828DX5K	28 x 28 small cam 5 keys
DCBSD2828DX1K	28 x 28 small cam 1 key
DCBSD2830D	28 x 30
DCBSD2835D	28 x 35
DCBSD2840D	28 x 40
DCBSD2845D	28 x 45
DCBSD2850D	28 x 50
DCBSD2860D	28 x 60
DCBSD2875D	28 x 75
DCBSD3030D	30 x 30
DCBSD3030DX	30 x 30 small cam
DCBSD3030DX5K	30 x 30 small cam 5 keys
DCBSD3030D	30 x 30
DCBSD3030D	30 x 30
DCBSD3030D	30 x 30
DCBSD3035D	30 x 35
DCBSD3040D	30 x 40
DCBSD3045D	30 x 45
DCBSD3045DKP	30 x 45 Keyed Pairs
DCBSD3050D	30 x 50
DCBSD3055D	30 x 55
DCBSD3060D	30 x 60
DCBSD3075D	30 x 75
DCBSD3535D	35 x 35
DCBSD3535DKP	35 x 35 Keyed Pairs
DCBSD3540D	35 x 40
DCBSD3545D	35 x 45
DCBSD3545DKP	35 x 45 Keyed Pairs
DCBSD3550D	35 x 50

BRISANT D - KEY KEY	
Code	Description
DCBSD3555D	35 x 55
DCBSD3560D	35 x 60
DCBSD3575D	35 x 75
DCBSD4028D	40 x 28
DCBSD4040D	40 x 40
DCBSD4040DKP	40 x 40 Keyed Pairs
DCBSD4045D	40 x 45
DCBSD4050D	40 x 50
DCBSD4050DKP	40 x 50 Keyed Pairs
DCBSD4055D	40 x 55
DCBSD4055DKP	40 x 55 Keyed Pairs
DCBSD4060D	40 x 60
DCBSD4075D	40 x 75
DCBSD4545D	45 x 45
DCBSD4550D	45 x 50
DCBSD4550DKP	45 x 50 Keyed Pairs
DCBSD4555D	45 x 55
DCBSD4555DKP	45 x 55 Keyed Pairs
DCBSD4555DKPK	45 x 55 Keyed Pairs (pairs)
DCBSD4560D	45 x 60
DCBSD4575D	45 x 75
DCBSD5050D	50 x 50
DCBSD5050DKP	50 x 50 Keyed Pairs
DCBSD5050DKPK	45 x 55 Keyed Pairs (pairs)
DCBSD5050D	50 x 50
DCBSD5055D	50 x 55
DCBSD5060D	50 x 60
DCBSD5555D	55 x 55
DCBSD5560D	55 x 60
DCBSD6060D	60 x 60



BRISANT D - THUMB TURN (TT)	
Code	Description
DCBSD2828DT	28 TT x 28
DCBSD2835DT	28 TT x 35
DCBSD2840DT	28 TT x 40
DCBSD2845DT	28 TT x 45
DCBSD2860DT	28 TT x 60
DCBSD3028DT	30 TT x 28
DCBSD3030DT	30 TT x 30
DCBSD3035DT	30 TT x 35
DCBSD3040DT	30 TT x 40
DCBSD3045DT	30 TT x 45
DCBSD3050DT	30 TT x 50
DCBSD3055DT	30 TT x 55
DCBSD3060DT	30 TT x 60
DCBSD3075DT	30 TT x 75
DCBSD3528DT	35 TT x 28
DCBSD3530DT	35 TT x 30
DCBSD3535DT	35 TT x 35
DCBSD3540DT	35 TT x 40
DCBSD3545DT	35 TT x 45
DCBSD3550DT	35 TT x 50
DCBSD3555DT	35 TT x 55
DCBSD3560DT	35 TT x 60
DCBSD3575DT	35 TT x 75
DCBSD4028DT	40 TT x 28
DCBSD4030DT	40 TT x 30
DCBSD4035DT	40 TT x 35
DCBSD4040DT	40 TT x 40
DCBSD4045DT	40 TT x 45
DCBSD4050DT	40 TT x 50
DCBSD4055DT	40 TT x 55
DCBSD4060DT	40 TT x 60
DCBSD4075DT	40 TT x 75

BRISANT D - THUMB TURN (TT)	
Code	Description
DCBSD4530DT	45 TT x 30
DCBSD4535DT	45 TT x 35
DCBSD4540DT	45 TT x 40
DCBSD4545DT	45 TT x 45
DCBSD4550DT	45 TT x 50
DCBSD4555DT	45 TT x 55
DCBSD4560DT	45 TT x 60
DCBSD4575DT	45 TT x 75
DCBSD5030DT	50 TT x 30
DCBSD5035DT	50 TT x 35
DCBSD5040DT	50 TT x 40
DCBSD5045DT	50 TT x 45
DCBSD5055DT	50 TT x 55
DCBSD5060DT	50 TT x 60
DCBSD5530DT	55 TT x 30
DCBSD5535DT	55 TT x 35
DCBSD5540DT	55 TT x 40
DCBSD5545DT	55 TT x 45
DCBSD5550DT	55 TT x 50
DCBSD5560DT	55 TT x 60
DCBSD6028DT	60 TT x 28
DCBSD6030DT	60 TT x 30
DCBSD6035DT	60 TT x 35
DCBSD6040DT	60 TT x 40
DCBSD6045DT	60 TT x 45
DCBSD6030DT	60 TT x 30
DCBSD6035DT	60 TT x 35
DCBSD6045DT	60 TT x 45
DCBSD6060DT	60 TT x 60
DCBSD7530DT	75 TT x 30
DCBSD7535DT	75 TT x 35
DCBSD7545DT	75 TT x 45

BRISANT D - KEY	
Code	Description
DCBSDKBCUTBLPI	Black Pink
DCBSDKB	Blank
DCBSDCSC	Cutter

CUT KEY CAP	
Code	Description
DCBSDKBCUTBLOR	Blk/Orange
DCBSDKBCUTBLRD	Blk/Red
DCBSDKBCUTFYBL	Yellow/Blk



HALF CYLINDER	
Code	Description
DCBSD1030D	10 x 30
DCBSD1035D	10 x 35
DCBSD1040D	10 x 40
DCBSD1045D	10 x 45
DCBSD1050D	10 x 50
DCBSD1055D	10 x 55
DCBSD1060D	10 x 60

MODULAR EXT	
Code	Description
DCBSD028DE	28mm
DCBSD030DE	30mm
DCBSD035DE	35mm
DCBSD040DE	40mm
DCBSD045DE	45mm
DCBSD050DE	50mm
DCBSD055DE	55mm
DCBSD060DE	60mm
DCBSD075DE	75mm

MODULAR INT	
Code	Description
DCBSD028DI	28mm
DCBSD030DI	30mm
DCBSD035DI	35mm
DCBSD040DI	40mm
DCBSD045DI	45mm
DCBSD050DI	50mm
DCBSD055DI	55mm
DCBSD060DI	60mm
DCBSD075DI	75mm

MODULAR THUMB TURN	
Code	Description
DCBSD028DT	28mm
DCBSD030DT	30mm
DCBSD035DT	35mm
DCBSD040DT	40mm
DCBSD045DT	45mm
DCBSD050DT	50mm
DCBSD055DT	55mm
DCBSD060DT	60mm
DCBSD075DT	75mm

HALF CYLINDER -THUMB TURN	
Code	Description
DCBSD1030DT	10 x 30
DCBSD1035DT	10 x 35
DCBSD1040DT	10 x 40
DCBSD1045DT	10 x 45
DCBSD1050DT	10 x 50
DCBSD1055DT	10 x 55
DCBSD1060DT	10 x 60
DCBSD1065DT	10 x 65

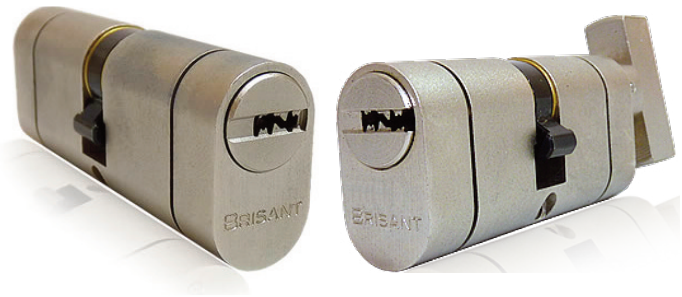

OVAL NICKEL	
Code	Description
DCBSD3030DO	30 x 30
DCBSD3535DO	35 x 35
DCBSD4040DO	40 x 40

OVAL NICKEL (TT)	
Code	Description
DCBSD3030DTO	30 TT x 30
DCBSD3535DTO	35 TT x 35
DCBSD4030DTO	40 TT x 30
DCBSD4040DTO	40 TT x 40

OVAL HALF CYLINDER -NICKEL	
Code	Description
DCBSD1030DO	10 x 30
DCBSD1035DO	10 x 35





SCAN OVAL	
Code	Description
DCBSDSCANE	Oval Ext
DCBSDSCANI	Oval Int
DCBSDSCANPR	Int/Ext Pair

BRISANT D/M - HALF CYLINDER	
Code	Description
DCBSM1030D	10 x 30
DCBSM1035D	10 x 35
DCBSM1040D	10 x 40
DCBSM1060D	10 x 60

BRISANT D - BULLET	
Code	Description
DCBSDBCB	Brass lock 3 keys
DCBSDBCH	Lock Housing





SCREW IN CYLINDER - NICKEL	
Code	Description
DCBSDSCCS	SINGLE
DCBSDSCC	Pair



RIM CYLINDER	
Code	Description
DCBSDRMB	Brass
DCBSDRMBF	Brass F
DCBSDRMC	Nickel
DCBSDRMCF	Nickel F

BRISANT D - PADLOCK	
Code	Description
PDBSD541	54/1
PDBSD542	54/2
PDBSD543	54/3
PDBSD611	61/1
PDBSD612	61/2
PDBSD613	61/3
PDBSD61C	61mm Closed
PDBSD701	70/1
PDBSD702	70/2
PDBSD703	70mm/3”

BRISANT D/M - PADLOCK ASSEMBLED	
Code	Description
PDBSM541	54/1
PDBSM542	54/2
PDBSM611	61/1
PDBSM612	61/2
PDBSM61C	61mm Closed
PDBSM701	70/1
PDBSM703	70/3



PERSONALISED WEBSITE

It's always been important for Ultion to support its customers by providing the tools to show the benefits of Ultion technology and security. There's no better way to do that than with a personalised version of the Ultion website.

All of the big Ultion messages are included – the technology, the portfolio, the service and quality benefits, and why doors with an Ultion lock are the most secure in the UK. We offer this service completely **FREE OF CHARGE** as a sign of our commitment to you, our customers.

www.ultion-lock.co.uk/your-web-page

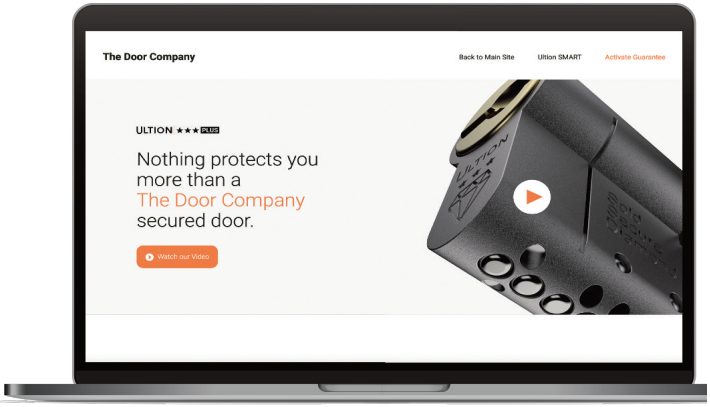

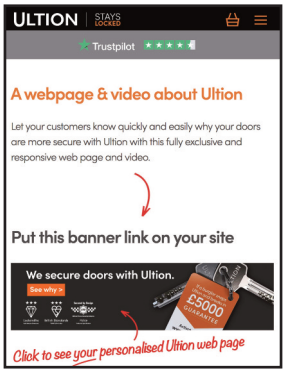



PERSONALISED LITERATURE

If something more unique is required you can access the Ultion Dropbox account to explore the vast library of pictures, CGI images, and videos. We also provide a bespoke design service to create any additional assets that you feel would support your sales.

Contact our sales team to discuss your personal requirements.



SHOWROOM POINT-OF-SALE

We have developed a range of showroom assets, ranging from leaflet holders and desk–mounted marketing assets to foamboard wall art.

You can use our free to use asset library of images, adverts, CGI renders and augmented reality links.

VIDEO Library

www.vimeo.com/brisantsecure

01924 410200
sales@brisant-secure.com www.brisant-secure.com

BRISANTSECURE

Brisant Secure reserves the right to change specification without notice (E&OE)



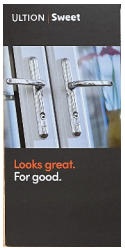







DL LEAFLETS	
Code	Description
MABKUL1	Ultion
MABKSW3	Sweet
MABKUN1	Nuki
MABKUB1	Bolt
MABKUCB1	Cashback

LEAFLETS / BROCHURES	
Code	Description
A4 Leaflets	
MALFULT1	Home Truths
A4 Brochure	
MAHTSE	Home Truths Showroom
MAHTFE	Home Truths Full Edition



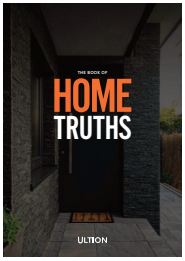



ULTION NUKI DEMO BLOCK	
Code	Description
MABLUN-BLE-PB	Black Esc / Black Pro
MABLUN-BLH-PB	Black Handle / Black Pro
MABLUN-CHE-PB	Chrome Esc / Black Pro
MABLUN-CHE-PW	Chrome Esc / White Pro
MABLUN-CHH-PB	Chrome Handle / Black Pro
MABLUN-WHCH	White Chrome
MABLUN-WHH-PW	White Handle / Wht Pro / Wht Ext
MABLUN-WHH-PW-CHE	White Handle / Wht Pro Chrome Ext
MABLUN-WHH-W	White Handle / White Ext



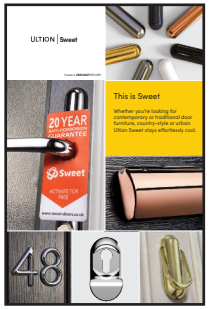



POSTERS ON 5MM FOAMEX	
Code	Description
MABDSMA0-1	Ultion A0
MABDSMA1-1	Ultion A1
MABDSMA2-1	Ultion A2
MABDSWA0-1	Sweet A0
MABDSWA1-1	Sweet A1
MABDSWA2-1	Sweet A2
MABDBOA0	Bolt A0
MABDBOA1	Bolt A1
MABDBOA2	Bolt A2
MABNUA0-1	Nuki A0
MABNUA1-1	Nuki A1
MABDNUA2-1	Nuki A2



We update our printed material from time to time so please check with us the current version prior to ordering.

PRESENTATION CASES	
Code	Description
MACASE_SW_3S	Sweet Case 3 star Plus Cyl Sweet Handle
MACASE_SW_3S2S	Sweet Case 3 Star Cyl 2 Star Handle
MACASE_SW_1S2S	Sweet Case 1 Star Plus Cyl 2 Star Handle





MASWDPBD 1 metre wide display



BEWARE OF THE ULTION PLAQUE	
Code	Description
MABOTUGO	Gold



MASWBOARD3 Counter top display

ULTION BOLT/NUKI DISPLAY	
Code	Description
MAHDBDU	36cm x 30cm 80cm tall

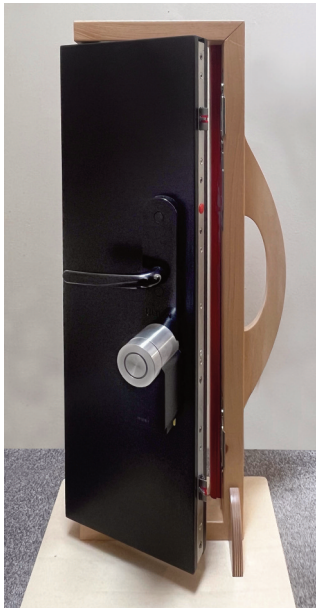



SWEET WINDOW HANDLE	
Code	Description
MABDSWWH-1	340mm board
MABDSWWH	600mm board

MOBILE SHOWROOM







Please call if you're interested in a visit from The Lockdown Express.



WWW.INSTAGRAM.COM/THE.LOCKDOWNEXPRESS/



BRISANTSECURE